City of Whitefish

ENGINEERING STANDARDS

February 2009

City of Whitefish
Public Works Department
P.O. Box 158
Whitefish, Montana 59937
(406)863-2460

TABLE OF CONTENTS

SECTION 1

GENERAL PROVISIONS

1.1 Standards 1-1
1.2 Applicability 1-1
1.3 General Policy - Utilities 1-2
1.4 City Fees 1-2
1.5 Service Connection Policy 1-3
1.6 Applicable Laws and Indemnification of City 1-4
1.7 Interruption of Service 1-4
1.8 Public Right-of-Way Permit (Excavation Permit) 1-4
1.9 Excavation of Material within the Existing Public Right-of-Way 1-6
1.10 Traffic and Pedestrian Control 1-6
1.11 Pavement Restoration 1-7
1.12 Liability Insurance and Bonding 1-8
1.13 Dust and Pollution Controls 1-9
1.14 Construction Hour Limits 1-9
1.15 Construction Permits 1-9
1.16 Critical Areas Checklist 1-10
1.17 Geotechnical Site Characterization 1-10
1.18 Stormwater Pollution Prevention Plan (SWPPP) 1-10
1.19 Municipal Facilities Exclusion Certification (MFE) 1-11
1.20 Latecomers Agreement 1-11
1.21 Stop Work Order 1-12
1.22 Cleanup 1-12
1.23 Call Before You Dig 1-12
1.24 Enforcement and Penalties 1-12
1.25 Utility Easement Location 1-12

SECTION 2

IMPROVEMENT PLANS

2.1 Engineering Plan Submittals 2-1
2.2 Horizontal and Vertical Control 2-2
2.3 Design and Development Requirements 2-2
2.4 Site Development Review 2-3
2.5 Construction Inspection, Testing, and Quality Control 2-3
2.6 Subdivision Improvement Agreement 2-5
2.7 Monumentation 2-5
2.8 Construction Control 2-6
2.9 Record Drawings 2-6
2.10 Two-Year Maintenance Bond 2-7
2.11 Infrastructure Acceptance Policy 2-8
2.12 Cold Weather Construction Requirements 2-9

SECTION 3

WATER SYSTEMS

3.1 General Requirements 3-1
3.2 Fire Flow 3-1
3.3 Water Service Lines 3-1
3.4 Water System Material Specifications 3-2
3.5 Backflow Prevention Devices 3-4
3.6 Extension of Mains 3-5
3.7 End of Water Main Design 3-6
3.8 Disinfecting and Flushing Water Mains 3-6

SECTION 4

SANITARY SEWER SYSTEMS

4.1 General Requirements. 4-1
4.2 Material Specifications 4-2
4.3 Sewage Lift Station Impacts 4-4

SECTION 5

STORM DRAINAGE SYSTEMS

5.1 Storm Drainage Plans and Report 5-1
5.2 Methods of Design 5-2
5.3 General Design Requirements 5-2
5.4 Storm Sewer System - Minimum Requirements. 5-3
5.5 Flow Control and Retention/Detention Pond Design Requirements 5-4
5.6 Infiltration Facilities 5-8
5.7 Retention Facilities 5-12
5.8 Additional Requirements For All Flow Control Facilities 5-12
5.9 Floodplains 5-15
5.10 Preservation of Natural Drainage Ways (Critical Stormwater Conveyances) ... 5-15
5.11 Water Quality Treatment Standards 5-16
5.12 Whitefish Lake Regulations 5-21
5.13 Maintenance of Stormwater Facilities 5-21
5.14 Pumping Systems 5-24
5.15 Easement Requirements 5-24
5.16 Illicit Connections 5-25
Appendix 5A Example Site Inspection Checklist 5-26

SECTION 6

GEOTECHNICAL SITE CHARACTERIZATION

6.1 Introduction 6-1
6.2 Applicability 6-1
6.3 Geotechnical Site Characterization Report 6-2

SECTION 7

EROSION AND SEDIMENTATION CONTROL

7.1 Overall Requirements 7-1
7.2 Minimum Criteria for Requiring an Erosion Control Plan 7-1
7.3 Erosion and Sediment Control Plan 7-2
7.4 Stormwater Pollution Prevention Plan (SWPPP) 7-6
7.5 Maintenance Responsibility 7-7
7.6 Inspections and Records 7-7
7.7 Enforcement and Appeals Process 7-8
7.8 Typical Checklist for Preparing Erosion and Sediment Control Plan. 7-8
7.9 Typical General Notes for Erosion and Sediment Control Plans 7-8
Appendix 7A Typical Checklist for Preparing Erosion and Sediment Control Plan.... 7-10
Appendix 7B Erosion and Sediment Control Inspection Form 7-12

SECTION 8

STREETS

8.1 Roadways and Walkways. 8-1
8.2 Chip Sealing 8-5
8.3 Driveways 8-5
8.4 Utilities and Easements 8-5
8.5 Bicycle/Pedestrian Paths 8-7
8.6 Parking 8-7
8.7 Alleys 8-7
8.8 Mail Boxes 8-7
8.9 Traffic Impact Studies 8-8
8.10 Boulevard Landscaping 8-8
8.11 Traffic Calming 8-9

SECTION 9

STREET LIGHTING

9.1 Street Lighting 9-1
9.2 Conduits and Ground Boxes 9-1
9.3 Wiring Methods 9-1
9.4 Pole Installation and Wiring 9-2
9.5 Spacing of Lights on Residential Streets 9-2

APPENDICES

A - Application for Plan Site Review
B - Stormwater Facility Planting Guidelines
C - Excavation/Right of Way Permit
D - Engineered Plan Requirements, Plan Review Checklist & General Notes
E - Cold Weather Construction Requirement Agreement and Inspection Log
F - Latecomers Application
G - Water and Sewer Material Specifications
H - Public Works Department Review Fee Information
I - GIS Control Points and Map
J - Weekly Construction and Inspection Report
K - Pre-construction Meeting Checklist
L - Runoff Intensity – Duration – Frequency Chart
M - Municipal Facilities Exclusion Checklist Form (MFE)
N - Traffic Calming Measures
O - Example Covenants and Easements for Stormwater Facilities

ENGINEERING STANDARD DRAWINGS

SECTION 1
GENERAL PROVISIONS

1.1 Standards.

The latest published edition of the Montana Public Works Standard Specifications are adopted in their entirety, except as amended by the latest edition of the City of Whitefish Engineering Standards. With respect to the design and/or construction of public facilities, any conflict(s) or difference(s) between the Montana Public Works Standard Specifications, and the City of Whitefish Engineering Standards shall be resolved in favor of the City of Whitefish Engineering Standards. This document is available at the City's website http://www.whitefish.govoffice.com/.

All water, sanitary sewer, storm drainage, and roadway systems, or any other construction of infrastructure within the public right-of-way or easement, shall be constructed, inspected, and tested in accordance with the current edition of The Montana Public Works Standard Specifications and the City of Whitefish Engineering Standards and other standards referenced elsewhere in this document.

1.2 Applicability.

These City of Whitefish Engineering Standards establish the minimum requirements for construction and/or upgrading of facilities both in the public right-of-way and for private development; transportation and transportation related facilities; storm drainage facilities; sanitary sewer and water improvements; and park, recreation, and open space facilities. The standards contained in this document apply whenever any public or private work is performed within the public right-of-way or public easement of the City of Whitefish including work performed by private parties at their own expense under authority granted by ordinance of the City Council or permit process of the Public Works Department. This manual is therefore to be used as a resource by City staff, citizens, developers, contractors, and design professionals.

Good design of projects is a goal of the City. Since these standards cannot anticipate all situations, compliance with these standards does not relieve the designer, property owner, or contractor of the responsibility to apply conservative and sound professional judgment to protect the health, safety, and welfare of the public. These are minimum standards and are intended to assist, but not to substitute for, competent work by design professionals. Special considerations or environmental constraints may require more intense or rigorous design parameters than would be otherwise required. City staff is therefore expected to use professional judgment in requiring more than these minimum standards under circumstances where implementation of the standards contained in this document would not satisfy the needs of special conditions or environmental constraints.

Note that it is not the intent of the City to unreasonably limit any innovative or creative

effort that could result in a superior design based upon the performance criteria of safety, economical maintenance, and pleasant appearance. Proposed departures from these standards by the developer will be evaluated by City staff on the basis that the proposal will produce acceptable results for the user, the environment, and the public.

1.3 General Policy - Utilities.

A. All development within City limits shall be served by the City water system. Developers are required to extend the existing system across the full frontage of the property being developed or otherwise extend the system to make it available for future extension and development, unless approved by the Public Works Director. Upon approval and final acceptance of construction, the Developer shall convey or deed the system as constructed to the City. Joint participation by the City may be applicable where oversizing is deemed appropriate by the Public Works Director/City Engineer. City approval is required prior to construction. Latecomer agreements, where appropriate, will be administered by the City.

B. All development within the City limits shall be served by the City sewer system. Developers are required to extend the existing system across the full frontage of the property being developed or otherwise extend the system to make it available for future extension and development, unless approved by the Public Works Director. Upon approval and final acceptance of construction, the Developer shall convey or deed the system so constructed to the City. Joint participation by the City may be applicable where oversizing is deemed appropriate by the Public Works Director/City Engineer. City approval is required prior to construction. Latecomer agreements, where appropriate, will be administered by the City.

1.4 City Fees.

Water and Sewer Service Connection Fee. A fee shall be paid, in accordance with the most current Whitefish Water and Sewer Rate Schedules which is available from the Public Works Department water billing office, for the connection of each new water or sewer service to the system. This fee must be paid even if a service line has previously been stubbed to the property line or other point. Connection fees for water and/or sewer must be paid before a Building Permit will be issued by the Building Department.

Public Works Department Engineering Review Fee. An engineering review fee must be received by the Public Works Department before the plan review process can begin for a development project. Half of the review fee is due at the time that the plans are submitted to the Public WorksDepartment. The review fee must be paid in full prior to the pre-construction meeting. The review fee calculation form is provided in Appendix H.

Impact Fees. All new and expanded growth and development, which includes residential, commercial, retail, and office development, shall pay impact fees. These fees

are applied towards the cost of new facilities needed to serve growth. These facilities are identified in Ordinance 07-25 and include: water, wastewater, stormwater, paved trails, Park Maintenance Building, Emergency Services Building, and City Hall. Impact fees are assessed at the time of the complete building permit application and paid at the time a Building Permit is issued for a new structure, a change in use of an existing building or dwelling unit, including any alteration, expansion, replacement, or new accessory building.

Plant Investment Fee. All new development and expansion of existing development where water and/or sewer fixtures are installed shall be required to pay Plant Investment Fees (PIF). PIFs are the sewer and water system impact fees. The fees are a cost recovery for the existing customers who have paid for the installation of oversized facilities and a network of facilities throughout the municipality to make service available for future growth. The fees are due and payable upon approval of the Building Permit for the proposed improvement. Facilities that do not require plumbing fixtures and have no impact on the utility system shall not be assessed PIF's. Fire sprinkling systems and fire hydrants are not considered plumbing fixtures and are exempt from the fees. The PIF's are based on rates established by the City Council.

Erosion and Sediment Control Plan (ESCP) Fee. The fee for submittal of an ESCP has been established with adoption of the Whitefish Critical Areas Ordinance 08-25, and successor ordinances. The fee is currently $100 for a single family or duplex ESCP and $200 for an ESCP for all other development. The ESCP and fee for single family/duplex should be submitted to the Whitefish Planning and Building Department. All other ESCP's should be submitted as part of engineering drawings to the Public Works Department. Fees may be increased beyond what is set forth herein by action of the City Council.

1.5 Service Connection Policy.

Annexation into the City of Whitefish for Municipal Services. If a property is located outside the City Limits, but is within 500-feet of a sewer main, state law requires new construction to connect to municipal services. Properties required to annex into the City shall complete a Petition for Annexation to the City of Whitefish and submit the form to the City Clerk's Office. Such annexation shall be completed prior to any connection to the required service. Prior to annexation, the property owner shall confirm zoning with the Whitefish Planning & Building Department. If the property requesting annexation has a County zone, a rezone of the property to a Whitefish zone shall occur prior to annexation. A completed Rezone Application shall be submitted to the Whitefish Planning & Building Department for processing.

Sewer Service Connection Procedures. When it is necessary to tap an existing sewer main for a service connection, the Customer or his Contractor shall provide all equipment, labor, and materials to tap the main, install the service line from the main to the point of service, and restore the pavement or other surface in the public right-of-way

to the pre-construction condition.

Water Service Connection Procedures. When it is necessary to tap an existing water main for a service connection, the Customer or his Contractor shall provide all equipment and labor to excavate and expose the main. The City shall provide the tap and corporation stop only for domestic service. For fire, irrigation, and any other connection, the Customer shall pay the actual cost of the tap and materials. Contractors tapping services must use an approved tapping machine and flush residue. The Customer or his Contractor shall provide all equipment, labor, and materials to install the service line from the corporation stop/service valve to the point of service and restore the pavement or other surface in the public right-of-way to its pre-construction condition.

1.6 Applicable Laws and Indemnification of City.

The Contractor shall give all notices and comply with all federal, state and local laws, ordinances and regulations affecting the conduct of the work, and shall indemnify and hold harmless the City against any claim or liability arising from, or based on, the violation of any such law, ordinance, regulation, etc., whether by himself or his employees.

1.7 Interruption of Service.

Any construction that will interrupt the normal operation of City sewer, water, storm or transportation facilities requires notification of affected City departments and property owners and/or residents. The Contractor shall notify the Whitefish City Police and Fire Departments at least forty-eight (48) hours prior to any street closures. All street closures or interruptions of utility services will require the Contractor to provide a news release specifying the location of construction and the duration of the closure. The Contractor shall present the news release to the news media at least two (2) working days prior to the beginning of any construction activity. The Contractor shall also notify utility users affected by the interruption of the type and duration of the interruption at least forty-eight (48) hours prior to beginning construction.

In the event of an emergency interruption, the Contractor shall notify the Public Works, Police and Fire Departments as quickly as possible. The Contractor shall immediately dispatch members of his staff to notify affected individuals by telephone or personal contact.

1.8 Public Right of Way Permit (Excavation Permit).

The excavating Contractor must have a completed, signed, and approved copy of a City of Whitefish Excavation/Right-of-Way Permit in its possession **prior to excavating** in any City right-of-way. The Excavation/Right-of-Way Permit form and Excavation Guidelines are included in Appendix C.

The Contractor is responsible for maintaining and repairing any and all defects or failures in the excavation area, including but not limited to ditch settlement and asphalt failure for a period of two (2) years. In the event the Contractor fails to make such repairs, the City will have the repairs performed and charge the Contractor the cost thereby incurred.

All construction, excavation, or other work on public or private property which will necessitate excavation within the public right-of-way shall require a Public Right-of-Way Permit issued by the Public Works Department. The work authorized by the Permit includes, but is not limited to; street construction and repair, water, sewer, and storm system construction and repair, utility connections and repair, landscaping, sidewalk, curbing and driveway construction and repair. The excavating Contractor must have a current City of Whitefish business license, proof of insurance, and have the required bond on file with the City Clerk's office. The Permit may contain such restrictions as are determined by the Public Works Department, including a deadline for restoration of public facilities.

All steel tracked equipment operating within a public street right-of-way shall be fitted with triple grouser street pads. The Contractor shall be responsible for damages to City infrastructure within the public street right-of-way and shall at its own expense, make any necessary infrastructure repairs.

Demolition Containers/Dumpsters. Right-of-way permits for temporary construction or demolition containers/dumpsters will allow them to remain on City property for a maximum of five (5) calendar days. Construction or demolition containers/dumpsters are not allowed to be placed on City streets at anytime between November 1st and March 15th. They are allowed to be placed on City streets for five (5) calendar days between March 15th and November 1st. The Permit will not be issued until all insurance and bonding requirements have been met.

Emergencies. In an emergency which requires repairs to be made immediately, the Contractor may excavate and complete the repairs without first having obtained a Permit. Prior to beginning work at the site during normal working hours, the Contractor shall notify the Public Works Department at 863-2456. Prior to beginning work after hours, the Contractor shall notify police dispatch at 863-2420. In either case, the Contractor shall describe the circumstances and provide the location of the emergency repairs. The Contractor shall obtain the Permit no later than the next scheduled City work day.

Potential Hazards Require Permits. Also included are any other uses of the public right-of-way where there is a possibility of creating a hazard. Examples of hazards are scaffolding, storage of materials or equipment, crane and equipment operations, demolition, sandblasting and painting operations, temporary construction or demolition dumpster placement, and any other use deemed a hazard by the Public Works Department. All construction hazards that are placed in the City right-of-way require a right-of-way permit.

1.9 Excavation of Material within the Existing Public Right-of-Way.

All material unsuitable for trench backfill, sub-base, or base course, excavated from the developed public right-of-way or easement, shall be removed from the site and disposed of by the Contractor. The disposal site shall meet regulatory provisions for disposal of the unsuitable excavated material. Unsuitable excavated material shall not be stockpiled on-site. Excavated material shall be confined to the work zone as established during the preconstruction conference or as shown in the contract documents.

With prior approval of the Public Works Department and project Design Engineer, on-site excavated soil may be used to backfill utility trenches. For further details see Standard Detail 19d - Note 10.

1.10 Traffic and Pedestrian Control.

- A Traffic and Pedestrian Control Plan shall be submitted and approved by the Public Works Department, at least forty-eight (48) hours prior to the commencing of an excavation. The Contractor must also notify the City Police and Fire Departments at least forty-eight (48) hours prior to any street or alley closure. A news release to the news media is also required at least two (2) business days prior to the beginning of any construction activity that requires road or lane closures.

- All traffic control devices used must meet the most current Manual on Uniform Traffic Control Devices (MUTCD), Montana Public Works Standard Specifications, and the City of Whitefish Engineering Standards.

- The location and description of all Traffic and Pedestrian Control Devices shall be shown on the plan. All signs, except "Stop" signs, shall comply with the MUTCD for size, type, placement, material, and reflectivity. "Stop" signs shall be 30". The plan must be approved prior to beginning construction. If the required devices are not in place, the Contractor will not be allowed to begin work on the project. All devices shall be kept in place and maintained in good visible condition throughout the project. The Public Works Department reserves the right to reject any device observed to be in substandard condition. Emergency access to, and through the work area shall be maintained at all times.

- All barricades and obstructions shall be protected at night by suitable signal lights which shall be kept illuminated from sunset to sunrise. Barricades shall be of substantial construction and shall be constructed to increase their visibility at night. Suitable warning signs shall be placed and illuminated at night to show in advance where construction, barricades, or detours exist.

- If flagging is required, it shall be accomplished by competent and properly equipped flag persons. Flagging shall be accomplished as described in the

Montana Department of Transportation Flagger's Handbook and the MUTCD.

- All traffic control devices must be in place prior to the commencement of the excavation and left intact until the street is reopened to the general public.

- The Contractor shall remove all traffic and pedestrian control devices within 24 hours of the conclusion of the project construction.

- If the Contractor fails to maintain the Traffic and Pedestrian Control Devices in accordance with the approved plan, the City will correct the deficiency and all labor, equipment, material, and administrative costs will be billed to and paid by the Contractor.

1.11 Pavement Restoration.

The Contractor signing the Public Right-of-Way Permit shall be responsible for pavement replacement.

- Pavement must be cut with a saw or pneumatic asphalt breaker prior to excavating. The trench will be cut along a neat vertical line a minimum of 12" from each edge of the trench opening. (For example: If the excavator bucket width is 2', then the width of the asphalt cut must be a minimum of 4', with the excavation centered between the two cuts.)

- If any adjacent longitudinal or transverse joints or cracks are less than 3' from the cut lines, the pavement will be removed and replaced to that joint or crack.

- Additional asphalt cuts will be required if the cut edges or adjoining sections of asphalt are disturbed during excavation.

- All permanent paving must be completed within seven (7) working days after cutting the pavement.

- Trench edges must be cleaned and a tack coat (SS-1, SS-1h or approval equal) applied before placing asphalt.

- Do not place asphalt hot-mix when the air temperature is less than 40 degrees Fahrenheit and rising. Do not place asphalt upon a surface which is frozen or that has a temperature less than 32 degrees. Paving is not allowed during rainfall or if standing water is encountered.

- Pavement replacement: A minimum of four (4) inches of Hot-Mix asphalt (PG 64-34) placed in two (2) properly compacted lifts. In no case will the new replacement be less than the existing section. Compaction testing may be required by the City at the Contractor's expense.

- Temporary paving with a "winter" mix asphalt such as UPM or QPR is allowed only when Hot-Mix asphalt is not available; a three (3) inch minimum thickness is required. The road cut may also be temporarily repaired with a minimum of four (4) inches of Portland cement concrete. The temporary repair shall be maintained by the Contractor for safe winter usage. The permanent restoration shall be made as soon as the ground is thawed in the spring, or as directed by the Public Works Department.

- Crack sealing of all asphalt joints may be required.

- All excavations within 36" of the edge of the asphalt shall require removal and replacement from the edge of asphalt to the excavation edge. Asphalt patch areas that fall within the wheel path of the vehicular travel lane shall be increased in size to the center of the lane or adjacent lane. In no circumstance will the edge of a patch area be allowed to fall within the wheel path.

- Any damage to the existing asphalt surface caused by the Contractor's operations shall be repaired at the expense of the Contractor, including but not limited to gouges, scrapes, outrigger marks, backhoe bucket marks, etc. A slurry seal type covering will be considered the minimum repair. The Contractor shall be responsible for maintaining the area in a smooth and drivable condition until the permanent pavement is placed.

- If the Contractor fails to restore the pavement within seven (7) working days of an asphalt cut, or fails to maintain the trench or area as required, the City (or a paving contractor hired by the City) will complete the restoration or maintenance, and all labor, equipment, material and administrative costs shall be borne by the Contractor.

- Contractors that cut into City streets with geotextile fabric will be required to over-excavate the trench to provide a minimum 2'-0" overlap with existing fabric. Detailed requirements for the cutting and overlapping of existing geotextile fabric are included in the PVC Trench Bedding and Backfill drawing SD-19a.

1.12 Liability Insurance and Bonding.

Liability Insurance for Work within Existing Public Right-Of-Way and/or Easement. The Contractor shall procure and maintain during the construction period, at the Contractor's expense, Contractor's Liability Insurance in accordance with the Supplementary Conditions to the General Conditions of the Montana Public Works Standard Specifications.

All construction work within the public right-of-way or easement (sidewalk and curb

construction, storm drainage and sanitary sewer service line installation, repair, etc.) will require the Property Owner/Contractor to provide the City with a Performance Bond. The bond shall be equal to the constructed value of the project and shall remain in force for one year. Contractors furnishing the City with an annual bond of $5,000 will not be required to furnish additional bonding if the $5,000 bond meets the requirements of these standards.

Bonds may be in the form of a Surety Bond, a Certificate of Deposit (CD), a Certified Check, or an irrevocable Letter of Credit issued by a bank licensed to do business in the state of Montana.

1.13 Dust and Pollution Controls.

The Contractor shall be responsible to maintain the construction site and all haul routes in accordance with the current requirements of the City of Whitefish Air Pollution Control Program. If the Contractor fails to meet these requirements, City forces may perform the work or have the work done and the Contractor shall reimburse the City for labor, equipment, materials, and administrative costs. In some cases a stop of work order shall be enforced until clean up of City Streets has occurred.

1.14 Construction Hour Limits.

In accordance with the City's "Disturbing the Peace" ordinance, no construction activity is allowed within the City from 7:00 p.m. to 7:00 a.m.

1.15 Construction Permits.

A. Building Permit (Planning & Building Department).
A Building Permit is required for construction work including alteration, repairs, and demolition.

B. Public Right-of-Way Permit (Public Works Department).
A Right-of-Way Permit is required for any work within the right-of-way. Such work may include utilities work, lane closures, driveways, curbs, and sidewalks. The current Right-of-Way Permit fee is $25.00. Fees may be increased by the City Council. The right-of-way permit application is included in Appendix C and is available at the City's website http://www.whitefish.govoffice.com/.

C. Service Line Permit (Public Works Department).
A Service Line Permit is required to be filled out by a Montana State Licensed Plumber for installation or alteration of a water or sewer service line. The permit application is available at the City's website http://www.whitefish.govoffice.com/.

1.16 Critical Areas Checklist.

In accordance with Critical Areas Ordinance 08-25, or any successor ordinance, prior to receiving a building permit property owners must submit a Critical Area Checklist to the Whitefish Planning and Building Department. The checklist addresses the presence of streams, lakes, critical stormwater conveyance, wetlands, steep slopes or areas with potentially high groundwater on the property. The Critical Areas Checklist is available at the City's website http://www.whitefish.govoffice.com/. There is no fee charged for submittal and review of the Critical Areas Checklist.

1.17 Geotechnical Site Characterization.

A geotechnical site characterization (GSC) is required to demonstrate suitability for stormwater disposal and to determine sub-level structure construction feasibility in potentially high groundwater areas. A qualified geotechnical engineer (a professional engineer currently licensed in the State of Montana with geotechnical engineering as a specialty) is required to perform the GSC. Hydrogeologists, civil engineers and engineering geologists may prepare sections of the geotechnical site characterization study, excluding structural, foundation and pavement design. The study shall be performed in accordance with the criteria specified in Section 6.

Applicability
The scope and geographic extent of the investigation may vary depending on the general location and setting of the site, the characteristics of the target soil deposits, and whether there are known or anticipated drainage problems in the vicinity of the site.

A GSC is required for:

- Projects proposing infiltration (infiltration facilities, detention facilities receiving credit for pond bottom infiltration, etc.);
- Projects located within or draining to a problem drainage area, as recognized by the City Engineer, or within an area mapped by the City as having the potential for high groundwater.

This Section does not apply to the construction of single family homes or duplexes unless the project's stormwater design includes an infiltration system and the project creates greater than 5,000 square feet of new impervious area.

1.18 Stormwater Pollution Prevention Plan (SWPPP).

Construction activity which results in the "disturbance" of equal to or greater than one acre of total land area will need to obtain a Storm Water Discharge Permit. The Storm Water Pollution Prevention Plan (SWPPP) must be approved by the Montana Department of Environmental Quality prior to the pre-construction meeting.

1.19 Municipal Facilities Exclusion Certification (MFE).

Municipal Facilities Exclusion Certification may be required by the Montana Department of Environmental Quality as part of their review process. In cases where utilities are available to lots or subdivision's utility plans have been approved by the City, a MFE may be submitted to the City for certification of the availability of municipal services.

If water or sewer services have not yet been stubbed out to individual lots from the main lines, then the following note must be included on the preliminary and final plats: "Water and sewer services have not been stubbed out to individual lots from the main lines and are the responsibility of the lot owner at the time that service is required." This statement is not required if the application is part of an engineered plan review.

As part of the MFE application, a site plan must be provided showing details of existing and proposed water and sewer services. Recorded easements must be provided for services that cross other lots. If the MFE certification relates to a civil engineering plan set then the recorded easements shall be submitted along with final construction plans.

1.20 Latecomers Agreement.

The City has a latecomer's reimbursement policy for the following infrastructure improvements: water and sewer mains and related facilities, sidewalks, pedestrian and bicycle paths, storm drainage facilities, streets, street lighting, and associated curbs and gutters. Any person who constructs such infrastructure improvements at the direction of the City, in excess of that which is required to meet minimum standards or extends beyond the minimum requirement for improvement and will benefit properties abutting the new main, may, with the approval of the City, enter into a contract with the City which will allow the Developer to be reimbursed for that portion of the construction cost that benefits the adjoining properties and/or is in excess of the minimum standard. This contract is commonly termed a "Latecomers Agreement". The City's Latecomers Agreement form is included in Appendix F. Cost apportionment for a Latecomers Agreement must be submitted for review and approval prior to plan approval to be considered.

The Developer is responsible for initiating, executing, and, after City approval, filing the Latecomers Agreement and providing the City with a copy of the recorded agreement. The Agreement shall include a list of those properties which will benefit from the extension, the length of the Agreement, a map outlining and designating properties, legal descriptions as required by the City, and backup data supporting the costs submitted. The City will exercise its best good faith efforts to collect the latecomers fee from persons wanting to connect to the utility extension or street improvement and subsequently see that the Developer receives payment. The Latecomers Agreement application must be submitted within 90 days of acceptance of the project by the Public Works Department. Acceptance of the project may occur once the design Engineer has certified to the City that the facilities are complete and installed in substantial compliance with the approved

plans and specifications.

1.21 Stop Work Order.

A written Stop Work Order may be issued by the City Engineer or his designate if the work in progress does not meet the Engineering Standards for the City of Whitefish, Montana, or for any other valid reason. Work may resume only after the Stop Work Order has been rescinded by the City Engineer.

1.22 Cleanup.

The Contractor shall clean the construction site of all debris, construction materials, etc., immediately upon completion of the project. If the Contractor fails to clean the construction site, the City will complete the cleanup or hire a private contractor to complete the cleanup and the cost, including administrative costs, shall be borne by the Contractor. Site cleanup is required at the end of any working day (this includes daily street sweeping, as needed

1.23 Call Before You Dig.

A One-Call System (UDIG) utility locate request must be fulfilled prior to beginning any excavation within the City of Whitefish. Two working days advance notification is required and will be enforced. The utilities UDIG One-Call system phone number is 755-8344. The contractor will mark the proposed excavation site with white paint and/or white marking flags in accordance with APWA/UULC standards.

1.24 Enforcement and Penalties.

Any enforcement action for violation of these Standards, except costs assessed under provision of these Standards, shall follow the procedure outlined in Section 1-4-1 of the Whitefish City Code as it currently exists or is, hereafter, amended.

1.25 Utility Easement Location.

No underground utilities shall be placed in the boulevard between the back of curb and sidewalk, underground utilities (other than sewer, water, storm sewer, and street lighting) shall be located in a 10-feet utility easement. There shall be reserved along the front lot line and side street lot line of each residential lot a ten foot (10') wide utility easement along, contiguous and adjacent to the lot line to provide an area between the sidewalk and easement line for the placement of privately owner underground utilities, including power, phone, gas, cable, etc. No private utilities shall be located in water or sewer trenches. With prior approval of the Public Works Director, the utility easement location may allow for variation on steep terrain.

All underground electrical, gas, phone, and TV cable lines must maintain a minimum of

five (5) feet of undisturbed soil (horizontally) from water or sewer utility trenches. If approval is obtained in advance from both the appropriate utility companies and the public works director, electric, phone and cable facilities may be placed under the sidewalk. In this case a five foot wide utility easement would be required along the front lot line for the installation of natural gas lines.

Utility lines shall be designed by a licensed professional engineer or by the utility firms in cooperation with the subdivider. All applicable laws, rules and regulations of appropriate regulatory authority having jurisdiction over such facilities shall be observed. Location of all proposed utilities must be shown on the construction plans that are reviewed and approved by the Public Works Department.

SECTION 2
IMPROVEMENT PLANS

2.1 Engineering Plan Submittals

Complete plans and specifications for all proposed water distribution systems, sanitary sewer facilities, storm drainage facilities, streets, commercial development and subdivisions, including any necessary dedications and easements shall be submitted to the Public Works Department for review and approval prior to any construction. The Contractor shall not commence operations on site until the Director of Public Works has approved the plans, fees have been paid, and a pre-construction meeting has been held.

Water and sanitary sewer system design shall be approved by the Public Works Director prior to being submitted to the Department of Environmental Quality. Storm drainage, erosion control and street designs shall be submitted to and approved by the Public Works Director. All required approvals shall be obtained prior to beginning construction. Pre-construction meetings must be held with the design engineer, contractor, inspection and city personnel prior to the start of construction. Design calculations and testing results shall be submitted to the Public Works Director as required.

Plan and profile drawings are required for all proposed transportation-related improvements, storm drainage facilities, and sewer and water improvements. Plan sheets are required for street lighting, erosion control, signage, and landscaping. Improvement plans shall be prepared by a Professional engineer licensed within the state of Montana. The plans and specifications shall bear the seal of the Engineer that is responsible for the design.

The plans shall clearly show the beginning and end of work by station and coordinates. The plans shall show a north arrow, Township, Range, Section numbers, land owner name (s), edge of existing pavement, cut/fill slope limits, right-of-way limits, curve data, stationing, bearings, control points, survey monuments, street name signs, traffic signs, existing and new drainage features, existing creeks, details shown and referenced, fences, retaining walls, and connection details shown at beginning and end of project. On subdivision or improvement plans exceeding three sheets a Title sheet shall be included.

An overall storm drainage, water and sewer plan must be shown on a single sheet when the plan and profile sheets for each utility exceed three (3) sheets or all the plan sheets are not in a common North – South orientation. If there are privately owned roads or utilities included in the plans this must be noted on the title sheet.

Three sets of engineering plans must be submitted for review by City Staff. All three sets of engineering plans shall be submitted to the Assistant to the Public Works Director. One of these sets will be distributed by Public Works to the Fire Marshall and two sets will be distributed within the Public Works Department.

Upon final approval a vellum or master copy of the cover sheet must be provided to the City for signatures of the Public Works Director and Fire Marshal. All plan sets on the job site must be the final approved set with the required approval signatures.

For further specific minimum requirements see the Plan Checklist in Appendix D.

No changes or revisions to the approved plans shall be considered effective without the following:

1. The assigned City Inspector may verify and approve the change. The Inspector shall note the change on his/her field drawings, or
2. For significant changes as determined by the Director of Public Works, a copy and an electronic file of the revised sheet noting the revision shall be submitted to the Director of Public Works for approval. The revision shall be noted in a revision box. Revision approval is required prior to construction.

2.2 Horizontal and Vertical Control

Permanent benchmarks and datum shall be clearly shown on the plans and include location, description, and elevation. The Montana State Plane Coordinate System, Federal Information Processing Standard (FIPS) Zone 2500, North American Datum, 1983 (NAD 83), International Feet, shall be used for horizontal control, or referenced to this datum. The North American Vertical Datum 1988 (NAVD 88) shall be used for the vertical control. A control point file is required so that the project can be oriented in the City's GIS database. The control point file can be a unique layer in the CAD drawing or a shape, text, or tabular file.

An electronic copy of the GIS Control Points is shown in Appendix I. A digital copy of this information is available from the Public Works Department.

2.3 Design and Development Requirements.

Design Requirements. All water, sanitary sewer, storm sewer, and street systems necessary to provide service to and within a development shall be constructed at the Developer's expense. .

Development Requirements. All subdivisions and developments shall be in compliance with The Subdivision Regulations of the City of Whitefish, except as appended or amended herein.

Development projects that include several phases of the project with utilities being installed with each phase are required to provide a utility master plan for the entire project with the first phase submittal.

It shall be the responsibility of the Developer to construct all streets and utilities from the existing facilities to the far property line of the development. All utilities shall be within a public right-of-way or recorded easement to permit future Developers free and unobstructed access.

A Latecomers Agreement may be approved by the City enabling the Developer to recover a pro-rated share of utility installation costs from late comers. The agreement shall apply only to service connections on the extended main. The agreement shall not apply to future extensions of the main. Section 1.20 of this document provides additional information on Latecomers Agreement.

It is the Developer's responsibility to obtain and provide the City with all easements and rights of way necessary to extend roadways and utilities to the development and provide for future extensions.

2.4 Site Development Review.

At Site Development Review Meetings, proposed projects are reviewed and general requirements of each department are identified. Meetings are currently held Thursdays at 1:30pm in the Planning Department. Site review applications must be submitted by the Friday before for the item to be placed on the following meeting's agenda. All proposed developments, excluding single family residences, must submit site plans and information as required on the Application for Site Development Review in Appendix A. Application forms are available from the Planning Department and on the City's website (www.whitefish.govoffice.com). The application and eight (8) copies of site plan should be submitted to the Public Works Department. If the plans do not meet the minimum checklist requirements as to content, they will not be routed to City Staff for review.

The applicant will be notified in advance of the Site Development Review committee meeting at which their project will be considered. The applicant and/or their representative are invited to attend the Site Review Committee meeting. The applicant will receive a copy of the Site Development Review Committee's minutes.

2.5 Construction Inspection, Testing, and Quality Control.

A Professional Engineer, or his/her designated representative, shall provide construction inspection and testing as required. Inspection and testing shall be in accordance with the current edition of the Montana Public Works Standard Specifications and the City of Whitefish Engineering Standards. The following quality control procedures will apply to all utility and roadway construction projects. The City reserves the right to conduct independent quality control testing at the City's expense during any phase of the construction. The Contractor shall bear the expense of all failed tests and the expense of bringing the material into conformance with the required specifications.

1. All water main valves and fittings, fire hydrants, sewer manholes, wet wells and

sewer/water main crossings shall be inspected and approved by the Professional Engineer or his/her designated representative, prior to backfilling.

2. A Professional Engineer or his/her designated representative, shall be present for all tests required in Section 02660, Section 02720, and Section 02730 of the Montana Public Works Standard Specifications. A written record of all tests results shall be submitted to the Public Works Department.

3. A Professional Engineer or his/her designated representative, shall provide the Public Works Department with photocopies of daily inspection reports, including Proctors and compaction test results for all projects or complete the weekly construction and inspection report form included in Appendix J.

Minimum Compaction Testing Procedures. The following minimum compaction testing procedures shall apply to all utility and roadway construction projects. Random longitudinal test locations are required. The Professional Engineer or his/her designated representative, may require additional tests. For projects containing less than 300 linear feet of improvements, a minimum of one compaction test for each improvement shall be required for the improvements listed below.

1. Utility Trenches and Underground Structures:
   For trenches up to eight (8) feet in depth, density tests shall be taken at twelve (18-24) inches above the pipe at one-half the trench depth and at the surface. For trenches greater than eight (8) feet in depth, density tests shall be taken at twelve (18-24) inches above the pipe, at one-third and two-third the trench depth levels, and at the surface. The minimum density shall be 95% Standard Procter, ± 3% optimum moisture. Each test location shall be separated horizontally from a prior test location.

   Horizontal Frequency:
   1. Utility Mains – One set of tests per 300 feet.
   2. Service Lines – One set of tests per three (3) services per utility type.
   3. Open Pit – Minimum of one test (Open Pit – at each manhole, water valve, storm inlet, curb inlet, vault, etc.)
2. Street sub grade:
   - All sub-base: 95% Standard Proctor, ± 3% optimum moisture. One random density test, every 300 linear feet of street.
   - All crushed gravel base: 95% Standard Proctor, ± 3% optimum moisture. One random density test, every 300 linear feet of street.

Television Inspection. Prior to the City's acceptance of the sewer system, the Contractor must provide television inspection of the system. The City of Whitefish reserves the right to inspect all underground utility systems by the use of a television camera prior to final acceptance. Any deficiencies shall be corrected at the Contractor's expense. The

cost of any sewer line cleaning or additional television inspection performed by the City shall be paid for by the Contractor.

2.6 Subdivision Improvement Agreement.

The Whitefish Subdivision Regulations provide for a Subdivision Improvement Agreement (SIA), whereby a subdivision final plat may be issued prior to the completion of required infrastructure improvements.

In such cases Developers sign a Subdivision Improvement Agreement with the City. They shall list all remaining improvements, their costs, and provide a schedule for completion. The Developer also provides a letter of credit from a local financial institution equal to 125% of the total cost of improvements, to guarantee that all improvements are completed, and on time.

It will be the Developer's sole responsibility to remain aware of, and meet, the completion deadline in the Subdivision Improvement Agreement. The City will attempt to send one letter, 45 days before the improvement completion date, warning the developer of the need to complete all improvements or extend the letter of credit. Depending on the facts and circumstances, the City may not in all cases be willing to have the completion date extended. If the situation is not satisfactorily addressed by 14 days before the letter of credit expires, the City will make a written demand upon the financial institution providing the letter of credit, for release of funds to the City equal to 125% of any remaining improvements. The City will then have the improvements completed, using the Developer's funds.

2.7 Monumentation.

Prior to any excavation within existing street intersections, a thorough search shall be made for existing intersection monuments, including checking with the Public Works mapping department. A statement from a Registered Land Surveyor shall be submitted to the Public Works department noting the search and findings of such search. If monuments are found, they shall be perpetuated by standard survey methods, including referencing to at least three (3) accessories.

As a minimum, monumentation for new subdivisions shall be in accordance with the Administrative Rules for Montana, Uniform Standards for Survey Monumentation, ARM 24.183.1101 Uniform Standards for Monumentation.

Monuments shall be placed as shown in Standard Drawings SD-2a or SD-2b. The monument shall be capped with a brass or aluminum cap stamped with the name and license number of the responsible land surveyor. The cap shall be recessed at least 1/8" below the final asphalt surface. Monument boxes w/lids of the same type as city water valves (six inches inner diameter) may be used.

2.8 Construction Control.

A. Work performed for the construction or improvement of City streets and utilities whether by or for a private Developer or by a City contractor, shall be done to the satisfaction of the City and in accordance with approved plans. It is emphasized that no work shall be started (including excavation) until such plans are approved and the required bonds posted. Any revision to such plans shall be approved by the Director of Public Works before being implemented. Failure to receive the City's approval prior to construction can result in removal or modification of construction at the expense of the Contractor or Developer to bring it into conformance with approved plans.

B. The City reserves the right to reject any installation not inspected and approved by the Director of Public Works or his designate.

C. Upon satisfactory completion of all required tests and acceptance of the main extension, the City will allow the extension to be connected to the City system.

D. No water main extension shall be energized except for test purposes or sewer mains connected to the existing system until the new extension has been accepted by the Director of Public Works or his designate, all fees and charges have been paid and all recorded easements for utilities located outside of the Public right-of-way have been delivered to the City. The City may not operate the water or sewer system prior to receiving a certification letter from the design engineer stating that the system was completed in accordance with the approved plans and specifications.

E. Within 90 days of completion of a main extension, the applicant shall provide the Public Works Department with record drawings that accurately indicates the main extension and appurtenances as actually installed in plan and profile.

F. No main extension will be accepted until satisfactory record drawings are provided. The two (2) year guarantee/maintenance period shall not start until this provision has been met.

G. Combustible materials shall neither be stored on-site nor used as building material until the water system and roadways are installed, tested and approved by the Public Works Department.

2.9 Record Drawings.

During the progress of work the Design Engineer/Contractor shall maintain one set of prints of the improvement plans showing all the "as-built" changes. This set shall be available on the job for spot inspection by the Public Works Department.

Prior to the acceptance of the improvements, the Design Engineer shall submit the

original plans to the Department labeled "RECORD DRAWINGS" showing all changes made during construction and shall be signed by the engineer of record and the contractor. In addition, a digital copy of the plans, survey control, and control point file shall be submitted.

Corrections shall be made to the original plan set. Original data that is superseded shall be crossed/hatched out. New data shall be border clouded and identified with the respective revision number within a triangle. Do not eradicate original figures, nor make corrections over them. All lettering must be clear and legible. Extensive changes, which cannot be made clearly on the original plan, should be made on a new sheet (supplemental sheet). The new sheet shall be signed by the Design Engineer and included with the "RECORD DRAWINGS". Any supplemental sheet shall be of the same quality as the original plans. The sheets that these replace must remain in the plan set but shall be crossed out with a note in the revisions block which identifies that this sheet is superseded by the replacement sheet number.

Upon project completion and **before final acceptance, a Professional Engineer shall submit record drawings (as described above) and certify in writing to the City that the construction of the public utilities and streets meets the requirements of the approved construction documents**.

2.10 Two-Year Maintenance Bond.

As a condition precedent of receiving final acceptance of infrastructure improvements, the Property Owner, Developer, or Contractor shall provide the City with a Maintenance Bond of ten per cent (10%) of the total value of the public infrastructure constructed within the subdivision, development, or phased development. The Contractor shall guarantee all materials and equipment furnished, and construction work performed for maintenance and repair work on existing public infrastructure for a period of two (2) years from the date of written acceptance of the work by the City.

The Maintenance Bond shall remain in full force for a two-year period after acceptance of the entire City infrastructure by the City for maintenance. The City expressly reserves the right to draft the Maintenance Bond for repairs not completed by the Property Owner, Developer, or Contractor within thirty (30) calendar days of being advised that repairs are required.

The Project Engineer or his/her designated representative, shall conduct a two-year inspection, to be attended by a representative from the Public Works Department. The inspection shall take place not less than ninety (90) days prior to the expiration date of the Maintenance Bond. The Maintenance Bond will be released when all deficiencies have been corrected to the satisfaction of the Director of Public Works. The Director of Public Works, the Project Engineer, or his/her designated representative, shall notify the Principal as listed in the Maintenance Bond.

2.11 Infrastructure Acceptance Policy.

Interim use of the underground utilities will be considered only after all required information is presented. The City will accept the new utilities for interim use and maintenance after the completion of the preliminary punch list items that affect the use and adequacy of the utility. A letter of acceptance for interim use will then be issued from the Director of Public Works and sent to the Developer and the Planning and Building Department for their files. The Developer/Owner will be responsible for the complete installation of all required infrastructure, even though the interim use of the utilities is allowed before final acceptance. Financial guarantee will be required for the punch list items that have not been accepted by the City prior to filing the final plat, annexation, or issuance of the building permit when the property is already within the City limits.

The purpose of this policy is to define the procedures and parameters by which the City of Whitefish will accept Developer/Owner-installed publicly owned and maintained infrastructure:

Interim Use. If a Developer/Owner wishes to begin construction of structures in an approved subdivision or any other property that has required infrastructure improvements, the public works department will require the following items be completed prior to the interim or final use of the new facilities:

1. The water and sewer utilities will be completely installed, inspected, tested, and accessible to City personnel.
2. A comprehensive walk-through with City staff, the Engineer and the Developer.
3. The Engineer of Record will certify in writing to the City that the utilities have been installed in accordance with the plans and specifications.
4. Copies of the required tests are supplied to the engineering division as well as the affected utility. The tests include the log or tape of the TV sewer inspection, bacteriological tests, pressure tests, hydrant flow tests, and other testing as required.
5. Engineer's certification will include a preliminary punch list of items that remain to be completed upon the installation of the finished grade or pavement.
6. Immediate repair or replacement of failures due to problems with materials and/or workmanship.
7. A schedule for the completion of the balance of the improvements.
8. A copy of the daily construction progress and inspection reports, including construction progress photographs.
9. Roads must be suitable for emergency vehicles.

Final Acceptance. Final acceptance of the public utilities will occur upon completion and acceptance of all required infrastructure development. Final

acceptance will be contemplated upon the completion of the following items:

1. A comprehensive walk-through with City staff, the Engineer and the Developer.
2. Completion of the final punch-list items.
3. Inspection and repair of the previously accepted facilities found to be out of compliance with the interim acceptance conditions. The City reserves the right to require re-inspection and repair of the conditionally accepted utilities if damage from final construction is suspected.
4. Final certification from the Engineer that the entire development has been completed in accordance with the approved plans and specifications.
5. Submission of final record drawings in an electronic format suitable for City archival.
6. Submission of the complete set of daily construction progress and inspection reports and photographs.
7. Copies of the required tests are supplied to the engineering division as well as the affected utility. The tests include the log or tape of the TV sewer main inspection, bacteriological tests, pressure tests, hydrant flow tests, compaction tests, and other testing as required.

Final acceptance of a completed utility system component can be granted prior to completion of the infrastructure development as a whole, if the City of Whitefish is provided with a Subdivision Improvement Agreement and letter of credit from a local financial institution showing that the remaining infrastructure components will be completed within a specific time frame and that the completed infrastructure operates independently of the guaranteed portion.

2.12 Cold Weather Construction Requirements.

As detailed by the adopted City of Whitefish Resolution No. 06-05 the following requirements shall apply to cold weather construction of new water mains, sewer mains, storm sewer mains, roads, appurtenances, and earthwork in the existing or proposed public right of way and shall be in effect when the air temperature is lower than 32 degrees or when frozen soils conditions exist. The Owner must sign a copy of the Cold Weather Construction Agreement in order for the project to proceed. A copy of the Cold Weather Construction Agreement is included within Appendix E.

Inspection Requirements

1. Full time inspection is required under the supervision of a Montana licensed civil engineer.
2. The Field Inspector shall document on-site activities using the DAILY INSPECTION LOG FOR COLD WEATHER CONSTRUCTION included in Appendix E. An inspection log shall be completed for each day of active construction, signed by both the Field Inspector and the Project Engineer, and

submitted to the Public Works Director with all pertinent attachments no later than 9 a.m. the following business day.

3. The Project Engineer shall provide the Public Works Department with current proctor test results for all backfill material prior to use of that material.
4. The Field Inspector shall perform or oversee soil compaction testing for all backfill material to verify optimal moisture content and compliance with approved specifications. Compaction tests shall be at taken at intervals of not more than 100 feet and at various depths, with 50% of the tests in the lower half of the trench or road section.

Warranty Requirements

Prior to connecting any new mains to existing City facilities, the Owner shall enter into a two year warranty agreement with the City for all water mains, sewer mains, storm sewer mains, roads, appurtenances, or earthwork constructed in the public right of way or proposed right of way during cold weather conditions. The warranty shall be enforced with a letter of credit issued by a local bank in the City's name. The letter of credit shall provide an amount equal to 50% of the City approved engineer's estimate for the cost of improvements.

Construction Requirements

1. A competent Project Supervisor, employed by the General Contractor, shall be on the job site continuously during periods of active construction.
2. Frozen soil, aggregate, or other material shall not be placed in backfill areas and all frozen soil, aggregate, snow, ice, or other material shall be removed before proper material is placed in fill area.
3. The length of open trenches shall be limited to not more than 50 feet during active construction.
4. Each trench shall be backfilled to match the surrounding grade when construction activity in that trench ceases for any period greater than one (1) hour.
5. Soil compaction shall be in accordance with the optimal moisture results of pertinent Proctor testing and shall conform to the approved plans and specifications.
6. Pipe installers shall abide by the manufacturers' cold weather guidelines, as well as the Uni-Bell Handbook of PVC Pipe, or an equivalent standard regarding the handling and installation of pipe, gaskets, fittings, etc.

The Public Works Department reserves judgment and authority to schedule or limit work near existing City utilities at their discretion.

A lack of compliance with these requirements may be cause for the Public Works Department to issue a stop work order or require work to be redone as a condition of final acceptance.

SECTION 3
WATER SYSTEMS

3.1 General Requirements

Water systems shall be designed, constructed, and tested in accordance with the current editions of circular WQB 1 - Montana Department of Environmental Quality - Standards for Water Works, the Montana Public Works Standard Specifications , and the City of Whitefish Engineering Standards. Standard Details 21-30 are the water system details that must be included, where applicable, in water system construction drawings.

All water main extensions will require the Design Engineer to submit a written report to the Director of Public Works which addresses the fire and domestic flow requirements. The report shall include data on test results at the nearest hydrant which shows the static pressure at zero flow from the hydrant and the residual pressure with available flow from the hydrant. For residential developments having more than 30 single family dwelling units or that require utilization of a pressure booster pump(s) the report may be required by the Public Works Department to include hydraulic modeling results that show the adequacy to meet fire and domestic flow requirements. The normal operating range of pressure allowed for water system design is 60-100 psi.

The layout of extensions shall provide for the future continuation and/or "looping" of the existing system as determined by the City with particular attention to limit the extent of infrastructure required for each lot.

3.2 Fire Flow.

The amount of fire flow required for structures shall be based on the Uniform Fire Code Appendix III-A. Non-structural utilization of an area shall have the fire flow requirements as determined by the Fire Chief. The minimum fire flow for any structure shall be 1,000 gallons per minute, with a minimum of twenty pounds per square inch (20 psi) residual pressure at any point in the system during flow.

3.3 Water Service Lines.

Structures containing two or more residences under separate ownership, such as townhouses or condominiums, shall have separate service lines, service valves and meters for each residence. Structures containing two or more residences, offices or businesses that are rental units under common ownership may have one service line, valve, and meter for all occupants within a single structure subject to written City approval. Water and sewer services shall have a minimum ten feet of horizontal separation. For additional service line details refer to the standard drawings for single residences and multifamily residences presented in this document.

3.4 Water System Material Specifications.

Minimum Pipe Sizes. The minimum diameter of all mains shall be eight (8") inches unless a smaller diameter is approved by the Director of Public Works, except fire hydrant runs less than fifty feet in length may be six (6") inches.

Pipe Material. Water main piping from six (6") to twelve (12") inches in diameter shall be AWWA C-900 DR 18 (235 psi) PVC pipe (formerly listed as Class 150). . All water main piping larger than twelve (12") inches in diameter shall conform to AWWA C-905 Standards.

Gate Valves (MJ x MJ). Gate valves (12" in diameter and under) shall be Mueller Resilient Wedge Gate Valves conforming to AWWA C-509 Standards, or an approved equal.

Butterfly Valves. Butterfly valves shall be Mueller Lineseal Butterfly Valves, or approved equal conforming to AWWA C-504 Standards. All valves over twelve (12") inches in diameter shall be butterfly valves.

Isolation Valves. Valves shall be installed in the distribution system at sufficient intervals to facilitate system repair and maintenance, but in no case shall there be less than one valve every 500 feet. *Note: Valves shall be installed on every branch line at intersections.

Fire Hydrants. Fire hydrants shall be Red Mueller Super Centurion 250 Fire Hydrants (5 - 1/4", 3-way) conforming to AWWA C-502 Standards. The placement of all fire hydrants shall be subject to the approval of the Fire Chief. Unless otherwise approved by the Fire Chief, the hydrants shall be spaced no further apart than one standard City block, which is 360 feet. The Fire Chief reserves the right to require additional fire hydrants if the demand of the structure(s) requires more flow than the minimum spacing provides. In general, hydrant spacing shall not exceed; 360 feet along streets in residential area, 300 feet in commercial areas and 150 to 200 feet in industrial areas. Flange tees or tapping sleeves with flange x mechanical (FL x MJ) valves, with stainless steel bolts, are required on all fire lines. For additional details see Fire Hydrant Standard Drawing No. 23).

Service Fittings. Service fittings shall be Mueller Insta-Tite for IPS PE pipe or 110 Series compression fittings for copper tubing or IPS PE pipe. No fittings shall be allowed from the corporation stop to the curb stop. SS liners are required for compression fittings on PE pipe.

Valve Boxes. Valve boxes shall be Tyler 6860 Series "DD" or East Jordan 8560 Series - Screw Type, #6 Base to be marked "Water".

Valve Marker Post. Valve marker posts shall be 4 inch x 4 inch reinforced concrete or Schedule 40 steel posts 5 feet long stamped with "W" and distance to valve.

Corporation Stops. Corporation Stops shall be Mueller B-25008 (3/4" - 2") or B-25009 for PE IPS (3/4" -1").

Curb Boxes. Curb boxes shall be Mueller H-10314 (.75 and 1 inch stops) or H-10310 with stationary rods (1.5 and 2 inch stops). Extended lengths on all boxes shall be 78 inches minimum. Stationary rods shall be 63 inches standard.

Service Saddles. Service saddles shall be Power Seal 3412AS(3"-12"), Romac model 306 (2" - 12") or Romac Model 305 (10" - 32"). An allowed alternate is Smith Blair Model 372 (4" - 12"). No single or double strap type is allowed on PVC pipe.

Service Pipe. Service pipe up to two (2") in diameter shall be one of the following:

1. Type K Copper (ASTM Specifications B-88-62. "Reference AWWA Standard C800-66, Appendix")
2. Polyethylene Pipe (IPS) SDR 7 - 3/4" and 1"*
3. Polyethylene Tube (CTS) SDR 9 - 1 1/2" and 2"**

*Beveling tool must be used.
**Stainless steel inserts required on all compression type fittings for PE tube. Tracer Wire to be installed on all PE Pipe, with DryConn connections. (See Standard Details 21 & 22).

Service pipe four (4") inches or larger in diameter shall be Class 150 PVC Pipe conforming to AWWA C-900 Standards.

Curb Stop. Curb stops shall be Mueller 300 Ball Curb Valves with Insta-Tite or 110 compression fittings. SS liners are required for 110 compression fittings on PE pipe.

Mechanical Joint Restraint. Megalugs, or similar joint restraining devices, shall be used. Thrust blocks shall be required at all Megalugs and similar mechanical joint retraining devices. (See Standard Details 23 & 30 for Megalug requirements for Fire Hydrants).

Warning Tape. Detectable warning tape shall be a minimum of 5 mils thick, three (3") wide and conform to APWA colors.

Tracer Wire. All mains and services shall be installed with 12 gauge (minimum) insulated solid core tracer wire, Copperhead Yellow Jacket Industries or approved equal. Tracer wire shall be taped to the top of the water main. Breaks, splices or taps shall be DryConn. In addition, tracer wire shall be brought up and tied off at each valve body, curb stop and fire hydrant (See Standard Details 22-24).

inimum Cover. The minimum cover for all water mains from top of pipe to finish grade shall be six (6) feet unless otherwise approved by the Public Works Director/City Engineer. Unless specifically authorized by utility personnel, the minimum depth of bury for service lines from the main to the premise shall be six (6) feet.

Tapping Sleeves. Tapping sleeves shall be Power Seal Stainless Steel Model 3490 AS (Stainless Steel), Romac SST III or an approved equal. Tapping sleeves shall be installed a minimum of 3 pipe diameters from the nearest joint on the existing pipe to be tapped. Use of size-on-size tapping sleeves requires pre-approved of the Public Works Department .

Ductile Iron Fittings. Ductile iron fittings shall be Class 350 SSB Fittings conforming to AWWA C-153 Standards. Main couplings shall be solid sleeve - MJ/SSB - Ductile iron (Long).

Meter Wells. Meter wells shall be Mueller/McCullough Thermal Coil Meter Box with aluminum bottom insulation and cast iron lid for ¾" and 1" services. Meter wells for services larger than 1" shall be considered on a case-by-case basis depending on meter size and application.

Main Line Tapping Procedures. Contractor to provide, install and test tapping sleeve and valve. City personnel are to be contacted to witness test. City personnel will perform tap and only City personnel shall operate valves on City system. Tapping shall not occur on Fridays or the day before a governmental holiday.

Service Line Tapping Procedures. Contractor to provide and install saddle and corporation stop. City personnel will perform tap and operate all valves. Public Works Department needs 48 hours notification to schedule a tap. Tapping shall not occur on Fridays or the day before a governmental holiday.

Accessibility. Water mains shall be installed in public right-of-way wherever possible. All water facilities shall be designed and constructed so that all such facilities are readily accessible for maintenance and repair. Where mains cannot be installed in ROW a 20-foot wide easement shall be provided with the pipe centerline five feet from one easement edge.

3.5 Backflow Prevention Devices.

Requirements for New Customers. All new customers not previously served by the Water Utility requesting introduction of water service to their premises, shall be required to install a suitable backflow prevention device, approved by the Director of Public Works/City Engineer or

the City Manager or his designate. Backflow prevention devices must be installed in accordance with the latest edition of the Cross Connection Control Manual of the USC Foundation for Cross Connection Control and Hydraulic Research. As required in the Uniform Plumbing Code, an approved Thermal Expansion Tank (along with relief valves) shall be installed whenever a backflow prevention device is present in the system line.

Location. The backflow prevention device shall be installed immediately following the inlet gate valve and preceding the meter, or in accordance with manufacturer's specifications, to facilitate removal for testing, repair or replacement.

Existing Residential Services. The Public Works Department shall have a regular program for installing backflow prevention devices, and necessary piping and valves, in all existing residential services. The cost of the installation shall be borne by the City.
Existing Commercial Services. The Public Works Department shall have a regular program for installing backflow prevention devices, and necessary piping and valves, in all existing commercial services. The cost of the installation shall be the responsibility of the customer.

Size and Type. The size and type of all backflow prevention devices shall be determined by the Public Works Director/City Engineer or his designate based upon the size of service and the degree of hazard that exists or can be expected to exist on the premises served.

Second Backflow Prevention Devices. All installation, maintenance, testing, repair or replacement of backflow prevention devices installed in addition to the devices required by these rules and regulations, shall be the responsibility of, and at the expense of, the customer.

Liability. The backflow prevention devices installed under these Standards are intended for the protection of the potable water supply and distribution system of the City and in no way relieve the customer from liability or requirements to install backflow prevention devices under the Uniform Plumbing code or other Building Codes that may apply.

3.6 Extension of Mains

Customers or Developers who have requested water service in an area not presently served by a City-owned main must extend the existing main across the full frontage of the property being served or developed. Requests for extension by subdividers shall conform to the subdivision rules and regulations and the water master plan where applicable.

Construction. Prior to the start of any construction on main extensions an engineering report, along with necessary plans and specifications for the extension, shall be submitted to the Montana Department of Environmental Quality for review and approval pursuant to ARM 17.38.101, and the rules of the Department. All construction and materials shall conform to applicable City Standards.

3.7 End of Water Main Design.

The end of a water main that may be extended in the future must include a valve, 10' main stub and end cap. Megalugs must be installed on the valve, the end cap and all pipe joints from valve to end cap (See Standard Detail 30).

3.8 Disinfecting and Flushing Water Mains.

1. Continuous Feed Method. The continuous feed method is the preferred method for disinfecting all water mains. Other methods used must comply with the Montana Public Works Standard Specifications and be approved by the Public Works Department.

2. Clearing the Main of Heavily Chlorinated Water. After the applicable retention period, heavily chlorinated water shall not remain in prolonged contact with pipe. In order to prevent damage to the pipe lining or corrosion damage to the pipe itself, the heavily chlorinated water shall be flushed from the main until chlorine measurements show that the concentration in the water leaving the main is no higher than that generally prevailing in the system or is acceptable for domestic use.

Heavily chlorinated water shall be dechlorinated when discharge is to waters of the State of Montana. Dechlorinating methods shall be approved by the Public Works Department.

SECTION 4
SANITARY SEWER SYSTEMS

4.1 General Requirements.

Sanitary sewer systems shall be designed, constructed, and tested in accordance with the current editions of the Montana Department of Environmental Quality Circulars, the Montana Public Works Standard Specifications and the City of Whitefish Engineering Standards. All sewers shall be designed as a gravity sewer whenever physically feasible. Standard Details 31-36 are the sanitary sewer details that must be included, where applicable, in sewer system construction drawings. The following shall apply to the design of all sanitary sewers:

Design Report - Gravity Sewers. Unless waived by the City Engineer, the Design Engineer shall submit a written report for all sanitary sewer extensions. The design report shall demonstrate that all sanitary sewer extensions have adequate capacity to convey wastewater from the anticipated service area and meet the minimum flow velocities and/or flow depth requirements in Chapter 30 of MDEQ Circular-2. The report shall also assess the impact on the Wastewater Treatment Plant.

Dead End Sewer Mains. Avoid dead end sewer mains with few (<4) services and no potential for future extension. Avoid locating manholes outside of roadway right-of-ways.

Quality of Sewage. No development shall introduce any sewage into the City of Whitefish sewerage facility that is not consistent with normal domestic sewage. The sewage must arrive at the Wastewater Treatment Plant in a non-septic condition. No storm water shall discharge to any sanitary sewer.

Velocity. The minimum velocity, in either gravity or force mains, shall be two (2) feet per second, based on a flowing full condition on gravity mains. The maximum velocity shall be ten (10) feet per second, unless otherwise approved by the City.

Minimum Depth. Sanitary sewers shall be buried to a depth sufficient to prevent freezing and shall have a minimum four (4) feet of cover. Shallower depths may be allowed by the Public Works Department if suitable pipe insulating provisions have been made.

Accessibility. Sewer mains shall be installed in public right-of-way wherever possible. All sewer facilities shall be designed and constructed so that all such facilities are readily accessible for maintenance and repair. Where mains cannot be installed in the ROW, a 20-foot wide easement shall be provided with the pipe centerline five (5) feet from one easement edge.

Manhole Spacing. The maximum spacing between manholes shall be 400 feet for sewer main at slopes of 0.4% - 4%, 300 feet for sewer main at slopes of 4% - 8%, and 200 feet at slopes greater than 8%.

Service Line Separation. A minimum of 10' horizontal separation must be provided between sewer and water service lines.

Garage Floor Drains. No direct connection of garage floor drains shall be allowed to the sanitary sewer service line.

Force Main Cleanouts. Pressure type cleanouts, of the same size as the force main, shall be provided at approximate 600 foot intervals along a force main unless approved by the City Engineer. A removable cap for the force main cleanout shall also be tapped for and fitted with a one (1) inch threaded plug. The force main shall be equipped with a plug valve and valve box immediately upstream of each force main cleanout.

Sewer Hookup Requirement. Sewer hookup is required for new construction if the proposed building is within 500 feet of a property served by sewer or within 500 feet of a City sewer main.

4.2 Material Specifications.

- Pipe Size. Sewer mains shall be sized for the ultimate development of the tributary area. Nothing shall preclude the City from requiring the installation of a larger sized main if the City determines a larger size is needed to meet the requirements for future service. Joint participation by the City may be applicable where oversizing is deemed appropriate by the City Engineer. The minimum diameter of any gravity sanitary sewer main shall be eight (8) inches.

- Gravity Sewer Main. Gravity sewer main material shall be PVC SDR 35.

- Pressure Sewer Main. Pressure sewer main (force mains) shall consist of HDPE SDR 11 or approved equal with butt fusion joints.

- Gravity Sewer Service Pipe. Gravity sewer service pipe shall be schedule 40 PVC. The terminal end of sanitary sewer services at undeveloped lots shall be marked in accordance with Standard Detail 31.

- Pressurized Sewer Service. Pressurized sewer service pipe shall be HDPE SDR11 or approved equal.

- Sanitary Sewer Service Lines. Structures containing two or more residences under separate ownership, such as townhouses or condominiums, shall have separate sewer service lines for each residence. Structures containing two or more residences, offices or

businesses that are rental units under common ownership may have one service line for all occupants within a single structure subject to approval by the City.

- Sanitary Sewer Manholes. All sanitary sewer manholes shall be constructed and installed as specified by the Montana Public Works Standard Specifications. In addition, all sanitary sewer manholes sections shall be sealed with an exterior rubberized joint seal meeting ASTM C-877, type II with a minimum width of nine (9) inches. (See Standard Details 32a & 32b). Avoid locating manholes outside of road right-of-ways. Avoid dead end sewer mains with few services and no potential for future extensions.

- Sewer Saddle. Sewer saddles shall be Romac Saddle: CB-4.63 U.N (for any main type) or PVC Saddle: O-ring/gasket seal w/stainless steel clamps (PVC main only).

- Gravity Main Cleanouts. Gravity main cleanouts shall not be permitted unless the Engineer shows that conditions exist as described in the MDEQ Circular 2, 34.1 (allowing cleanouts in special situations and at the end of mains less than 150 feet in length with no services installed and available for future extension).

- Sanitary Sewer Manhole Ring and Cover. The sanitary sewer manhole ring and cover shall be East Jordan Iron Works Model 3772Z1, or approved equal. The cover shall be marked Sewer. Manholes located within the paved sections of roadways or driveways or in areas subject to flooding shall have approved infiltration pans installed.

- Adjustment Rings. All adjustment rings shall only be composed of concrete or high density polyethylene (HDPE). No rocks, asphalt, wood shims or any foreign material shall be used to adjust rings. No more than two (2) adjustment rings shall be used per each manhole grate. Combinations of adjustment rings shall have a total height of more than two (2) inches and less than ten (10) inches. All grate and adjustment ring combinations shall be sealed with a rubberized chimney seal meeting the specifications of ASTM C-923 and shall have of a minimum thickness of 3/16 inches.

- Warning Tape for Force Mains. Detectable warning tape shall be a minimum of 5 mils thick, three inches wide and conform to APWA colors.

- Toner Wire for Force Mains. All force mains shall be laid with 12 gauge insulated solid core copper toner wire. Toner wire shall be insulated and taped to the top of the force main. Splices of toner wire shall be made with heat shrink tape.

- Testing. Testing of the manholes, sewer lines or force mains must be done in accordance with the Montana Department of Environmental Quality Circulars and the Montana Public Works Standard Specifications.

- Dog house Manholes. Dog house type manholes are not allowed when connecting to an existing sewer main unless approved by the Public Works Director.

- Television Inspection. Prior to the City's acceptance of the sewer system the Contractor must provide television inspection of the system. The cost of television inspection will be the responsibility of the Contractor. If any deficiencies are found during the inspection, the Contractor shall correct them at the contractor's expense.

- Oil/Water Separators. Automotive repair facilities and paint shops, dealerships, gas stations, equipment degreasing areas, and other facilities generating wastewater with oil and grease content are required to pretreat these wastes before discharging to the City sanitary sewer system. Pretreatment requires that an oil/water separator be installed and maintained on site. Oil/water separators for commercial/industrial processes must be sized on a case-by-case analysis of wastewater characteristics. Typically a minimum capacity of 750 gallons is required for small gas stations, auto repairs, and light commercial sites; 1500 gallon capacity for large-scale truck washing and steam cleaning facilities. The ultimate discharge must be directed to the sanitary sewer system. All units regardless of size shall be fitted with a standard final-stage sample box and spill-absorbent pillows. Oil/water separators shall be commercially manufactured and sized for the intended discharge rates for the facility where it is to be installed.

4.3 Sewage Lift Station Impacts.

A written report shall be submitted for any project that will create a new sewage lift station or will contribute to an existing sewage lift station. The report for a new sewage lift station shall contain, but not be limited to, the following:

-a description of the proposed wet well, pumping system, and force main.
-the capacity of the recommended pumps and potential for future upgrades.
-a map showing the potential lift station service area.
-the average and peak design flows for the proposed project and for the potential service area.
-the hydraulic capacity of the force main.
-the reserve capacity of the lift station when the proposed project is on line at full capacity (full build out).
-the pump run and cycle times for the average and peak design flows.
-strategies for improvements which may be necessary to accommodate future sewer extensions. (i.e., increased storage, pumping or auxiliary power capacity)
-a statement of the pump selection process, including the Engineer's calculations for the total dynamic head, total discharge head, net positive suction head, and other pertinent pump selection criteria.
-the designed pump operating curve plotted on a manufacturer's pump performance chart with the designed operating point clearly identified.

The report for a project that will contribute to an existing sewage lift station shall contain, but not be limited to, the following:

-a description of the existing wet well, pumping system and force main.
-the capacity of the existing pumps and potential forfuture upgrades.
-a map showing the potential lift station service area.
-a list of the existing users and their average design flows.
-the existing peak design flow and reserve capacity.
-the pump run and cycle times for the existing average and peak design flows.
-the hydraulic capacity of the force main.
-the proposed average and peak design flows to the lift station.
-the reserve capacity of the lift station with the proposed project on line at full capacity.
-the pump run and cycle times for the proposed average and peak design flows.
-recommendations for improvements, if necessary, to enable the lift station to serve the proposed project.

An emergency power supply will be required for all lift stations unless approved by the Public Works Director. Upon request from the Director of Public Works/City Engineer, the Design Engineer shall submit a list of three lift stations of the type proposed which have been in operation at least five years. The City reserves the right to accept or reject the proposed lift station.

An alarm system shall be provided that is capable of detecting power interruption, phase loss, low water, motor failure, seal failure (motor moisture sensor), high water, and high motor temperature conditions. The alarm signals shall be directed to an on site alarm monitoring and telephone dialer system. The alarm monitoring and telephone dialer system shall be a 1400 Sensaphone or approved equal. An hour meter is required on each pump. Amperage meters are required on each leg of the electrical wiring. Surge/Lighting protection is required on all control panels. Cathodic protection is required for all lift stations having a metallic exterior. The Engineer shall submit an analysis of the amount of cathodic protection required.

SECTION 5
STORM DRAINAGE SYSTEMS

Storm drain systems shall be designed, constructed, and tested in accordance with the current editions of the Engineering Standards for the City of Whitefish, Montana and the Montana Public Works Standards Specifications. The design shall be subject to approval by the City Engineer.

5.1 Storm Drainage Plans and Report.

Storm Drainage Plan. A Storm Drainage Plan shall be submitted for development or redevelopment that includes the creation of more than 5,000 square feet of new impervious surface area. A detailed stormwater report shall be prepared by a registered professional engineer. The storm water report shall contain the storm water calculations and a discussion of the design rationale. The plan shall include the following:

1. A map showing building site (s), open areas, drainage ways, ditches, culverts, storm sewers, inlets, storage ponds, roads, streets, and any other infrastructure improvements which may affect drainage characteristics. The map shall also include identification of the various ground surfaces (i.e. vegetation, gravel, pavement) and their respective coverage (square feet).
2. Topographic contours (one-foot intervals) and sufficient spot elevation data.
3. Description of the ultimate destination of stormwater runoff from the project and an evaluation of its impact on down slope drainage facilities.
4. Design calculations determining runoff quantities, storage requirements and peak rates.
5. Description of water quality design method and calculations.
6. A storm drainage facilities operation and maintenance plan. The plan shall:
    a. Identify ownership of all facilities.
    b. Establish a schedule for maintenance activities necessary to keep the system operationally effective.
    c. Identify the responsible party in charge of the specific maintenance duties.
7. Details and specifications (including invert and other pertinent elevation information) for all storm drainage improvements, such as storm sewer, manholes, inlets, discharge structures; and retention/detention pond dimensions and volume, side slope, and top, bottom, and maximum water surface elevations.

Pre-development and post-development runoff calculations for sizing drainage facilities shall include:

- Depiction of the drainage area on a topographical map, with acreage indicated (the offsite contributing area must be included). Provide a pre-development topography and drainage basin map and a post-development topography and drainage basin map.
- The change in peak discharge and volume of surface water entering and leaving the subject property.
- The capabilities of all downstream drainage systems within ¼ mile of the project site to handle the change in peak discharge and volume of surface water caused by the

development.

- In areas where ground water may be a factor, the analysis shall include the effects of the ground water on the total storm drainage system proposed for the development.

5.2 Methods of Design.

Storm Event Peak Rates and Volume. Two methods are to be used for determining peak storm water runoffs for the design of storm sewers, open channels and culverts. The Rational formula method is to be used to design storm sewer systems. Information on the Rational method is available in Chapter 7 of the MDT Hydrology Manual. A rainfall-intensity chart for Whitefish is presented in Appendix L. When it is necessary to know the volume of water and discharge in addition to the peak rate of flow, the SCS TR-20 Hydrologic Analysis Model or pre-approved hydrologic simulation model will be used together with a detailed routing analysis. For flow routing through detention facilities models such as; SWMM, StormNet and HydroCAD are also acceptable methods.

Culverts And Open Channel Design. Culverts shall be designed in accordance with the U.S. Department of Transportation, Hydraulic Engineering Circular No. 5. Open channels shall be designed using the energy concept and the Manning Formula. Channels in earth shall have sides with a maximum slope of one foot vertical rise for every two feet of horizontal distance. Steeper slopes will be permitted only if some type of bank protection is used to prevent erosion and sloughing of the sides into the bottom of the channel. Constructed and natural channels and culverts shall be designed with sufficient capacity to convey, at a minimum, the depth associated with the 100-year 24-hour design storm peak flow rate, assuming developed conditions for on-site tributary areas and existing conditions for any off-site tributary areas.

Storm Drain Systems and Inlets. The 10-year 24-hour design storm shall be used to size the enclosed storm sewer system and inlets.

5.3 General Design Requirements.

- All required stormwater retention/detention facilities must be constructed and in operation prior to paving and building construction unless otherwise approved by the Department of Public Works.

- The capacity of the downstream drainage course is required to be evaluated for a minimum distance of ¼ mile from the point of discharge of the development or as determined by the Public Works Department. The downstream conveyance system must be adequately sized to handle offsite peak flows conveyed through the development plus the onsite developed peak flow discharged to the drainage course from the controlling 10 year storm. This system should be shown on the drainage layout.

- The size of the controlled outlet shall be calculated for the total drainage basin when the total runoffs from both off-site and on-site areas are combined.

- The limits of the FEMA mapped 100-year flood plain shall be required to be delineated on the Final Plat as well as the engineering drawings for plat construction.

- Arrows indicating drainage direction in all public and private property shall be shown on the Construction Drawings for all hydraulic conveyance systems.

- A topographical map sufficient in area to show all areas draining onto the proposed land development must be submitted and show enough of abutting downstream properties to indicate natural or man-made drainage course into which the proposed land development is to drain. The direction of flow, acreage of areas contributing drainage to the development, the outline of the development, and location of intermittent streams or drainage courses which are within the site boundaries shall be indicated on this map.

- Surface water entering the subject property shall be received at the naturally occurring location, and surface water exiting the subject property shall be discharged at the natural location, with adequate energy dissipaters within the subject property to eliminate the potential for detriment to the existing downstream infrastructure.

5.4 Storm Sewer System - Minimum Requirements.

- Manhole Spacing. The maximum spacing between storm manholes shall be 500 feet.

- Minimum Pipe Size. The minimum diameter of any storm drain pipe shall be twelve inches except that a maximum length of sixty lineal feet of eight-inch diameter pipe may be used between inlets and manholes. The minimum size of any storm drain culvert is twelve inches.

- Storm Drain Manhole ring and Cover. The storm drain manhole ring and cover shall be East Jordan Iron Works Model 3772Z1, or an approved equal. The cover shall be marked Storm.

- Curbs and Gutters or Swales. Streets and roads shall be designed to ensure proper drainage and curbs and gutters or swales shall be required in all subdivisions. Curbs and gutters of adjoining properties shall be extended to match any new curb and gutter. Gutter, ditch, and swale flow line grades shall be greater than 0.5%.

- Culverts and Drainage Facilities. Culverts of adequate size shall be provided and installed by the subdivider where drainage channels intersect any street right-of-way or easement. All culverts shall extend at least the width of the base of the fill. The amount of backfill to be placed over the culvert and a culvert's capacity shall be determined by a licensed professional engineer. This shall include arrangements for driveway culverts. Culverts larger than 24" shall have flared ends.

- The subdivider shall provide suitable drainage facilities for any surface runoff affecting the subdivision. These facilities shall be located in street rights-of-way or in perpetual easements of appropriate width and are subject to approval by the City Engineer. Culverts shall be designed to accommodate runoff from upstream drainage areas.

- Drain Inlet Frame & Grate. The curb inlet frame and grate shall be Olympic SM 49, East Jordan Iron Works combination of product numbers 7222M1 or 7222M3 (Herringbone grate) or

an approved equal. "Dump No Waste" and fish image shall be on back. (See Standard Detail 40).

- "Beehive" Area Drain Frame & Grate. The beehive area drain frame and grate shall be Neehan Foundry model R-2560-D6 "beehive grate with frame", East Jordan Iron Works 1205-2 or an approved equal (See Standard Detail 42).

- "Drive Over" Area Drain Frame & Grate. The drive over area drain frame and grate shall be Neehan Foundry model R-2556-A Type C frame with Type G grate, East Jordan Iron Works model 1848-G or an approved equal.

- Sump Requirements for Catch Basins and Manholes. An 18" sump is required for catch basins and drain inlets. A 24" sump is required for storm drain manholes.

5.5 Flow Control and Retention/Detention Pond Design Requirements.

This section outlines the requirements for sizing flow control facilities. The flow control standards are based on the Stormwater Management Manual for Eastern Washington and the Spokane County Stormwater Manual. Standard flow control facilities are detention, retention (natural depressions), and infiltration facility. Any other facility is considered a non-standard system, and shall be evaluated individually by the City Engineer. Flow control facilities are necessary to mitigate potential adverse impacts on down-gradient properties due to the increase in stormwater runoff caused by land development.

The peak rate of stormwater runoff from any proposed land development to any natural or constructed point of discharge downstream shall not exceed the pre-development peak rate of runoff. The post development volume of runoff can exceed the pre-development volume of runoff when the required down-gradient analysis demonstrates that there will be no adverse impacts on down gradient properties or existing natural and constructed conveyance systems.

5.5.1 Detention Facilities Minimum Requirements.

A detention system is a storage facility that has a surface discharge. A detention facility is intended to control peak stormwater runoff rates but does not control volume. The following minimum requirements shall be met. Additional requirements are specified in Section 5.8.

Discharge rates

Detention facilities shall be designed such that the release rate does not exceed the pre-developed conditions for multiple storm events. The analysis of multiple design storms is needed to control and attenuate both low and high flow storm events. The total post-developed discharge rate leaving the site shall be limited to the pre-development rates outlined in Table 5-1.

TABLE 5-1
Allowable Discharge Rates

Design Frequency (Type 1 -24 hr storm)	Post-Developed Discharge Rate[1]
2-year (WQr)[3]	≤ 50 % of the 2-year pre-developed
10-year	≤ 10-year pre-developed
100-year	≤ 100-year pre-developed
100-year[2] (Emergency Overflow)	Overflow route only

1 Post-developed flow is equal to the release from detention facility plus the bypass flow.

2 The emergency overflow shall direct the 100-year post-developed flow safely towards the downstream conveyance system

3 Water Quality Flow Rate Control Standards

If the detention facility is also proposed to function in conjunction with a water quality treatment facility, the following criteria must be met:

- The first orifice or outlet from the facility must be a placed a minimum 6 inches above the pond bottom; and,
- Infiltration rate shall be verified by methods outlined in Section 5.6.

Design Storms

The design 24-hour precipitation depths and recurrence interval used by Whitefish are provided in the table below. The precipitation isopluvial map data comes from the National Oceanic and Atmospheric Administration (NOAA) Atlas 2, Volume IX, 1973.

Table 5-2
City of Whitefish 24-Hour Precipitation Depths

Recurrence Interval	2 year	10 year	25 year	100 year
24-Hour Precipitation Depth (inches)	1.4	2.0	2.4	3.0

Facility Volume

The CN method requires the selection of, or the input of, a rainfall distribution and the precipitation associated with a design storm. The NRCS Type I 24-hour 10 and 100-year storm events are the design storms to be used for all flow control facilities that use a surface discharge. Detention ponds shall be sized using one of the following methods:

- Sized to contain the difference between the post development and the pre-development 24 hour storm events; or,
- Post development Level Pool Routing Method with a draw down time of 72 hours.

Setbacks
When a detention facility is proposed upslope of developed property or at the top of a slope inclined 15% or greater, the minimum setback from the slope must be greater than or equal to 50 feet or as determined by a licensed engineer with geotechnical experience.

Release Point
Stormwater runoff from a developed site shall leave the site in the same manner and location as it did in the pre-developed condition. The distance between the outlet structure and the inlet into the detention facility shall be maximized.

Exemption for Discharge to Whitefish River or Whitefish Lake
Neither the Whitefish River nor Whitefish Lake is vulnerable to increased flooding or erosion risk from peak flows. Therefore, if a system discharges directly to and is located within 500 feet of these water bodies they are exempt from detaining the 10-year storm.

FIGURE 5-1

TYPICAL DETENTION POND OUTLET SECTION

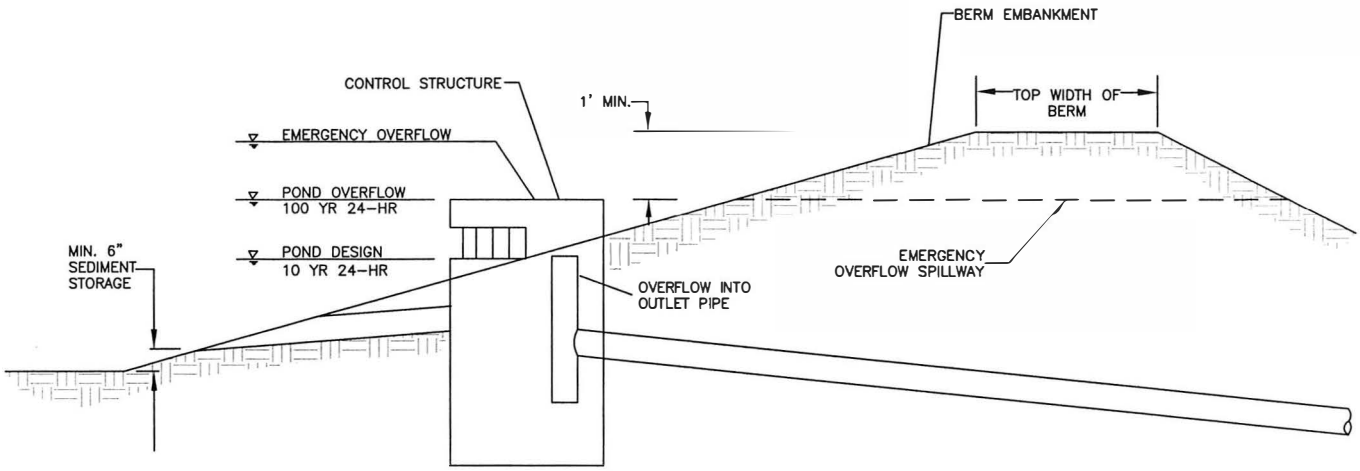

EMERGENCY OVERFLOW SPILLWAY CROSS SECTIONS

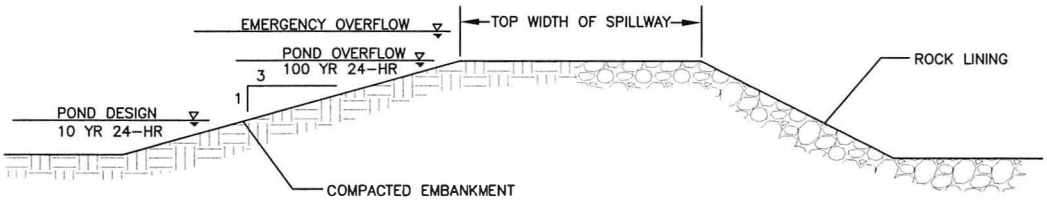

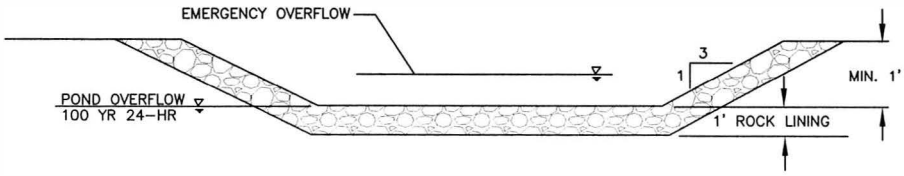

5.5.2 Outflow Control Structures.

Control structures are manhole or catch basins with a restrictor devices used for controlling outflow from a facility to meet a desired standards. Outflow structures are required for all stormwater detention facilities. The restrictor device is usually multiple orifices, consisting of two or more orifices and/or a weir section sized to meet performance requirements.

Runoff shall enter the detention facility through a conveyance system separate from the control and outflow conveyance system. The distance between the inlet and outlet shall be maximized to reduce sediment from accumulating in the outflow structure. The types of outflow control structures are listed below.

Multiple Orifice Restrictors

- In most cases, control structure need only two orifices: one at the bottom and one near the tip of the riser;
- Minimum orifice diameter is 3 inches; and,
- Orifice shall be constructed on a tee section or on a baffle.

Risers and Weir Restrictor

- Properly designed weirs maybe used as flow restrictors. However they must be designed to provide for primary overflow of the developed 100-year peak flow discharging to the detention facility; and,
- The combined orifice and riser (or weir) over flow may be used to meet flow requirements. However the design must still provide for primary overflow of the developed 100-year peak assuming all orifices are plugged.

Skimmer

- A skimmer is used as a flow restrictor and traps floatable debris and petroleum product. A skimmer keeps the outlet pipe free of debris and reduces maintenance need;
- Provide skimming up to the 10-year event high water level or greater.

Outflow Control Structure Minimum requirements. The following minimum access requirements shall be met. Additional requirements are specified in Section 5.8.

- An access road to the control structure is required for inspection and maintenance; and,
- Manhole and catch basin lids for control structure shall be locking and rim elevation shall match proposed finish grade.

5.6 Infiltration Facilities.

Much of the Whitefish area does not lend itself to stormwater infiltration due to the presence of shallow groundwater and silty soils that infiltrate very slowly, especially once they are disturbed. An infiltration facility is used for disposing of stormwater runoff into the subsurface and can be used for flow control provided that:

- The discharge is uncontaminated or properly treated prior to the stormwater entering the infiltration facility;
- The Geotechnical Site Characterization demonstrates the suitability of the soil for subsurface

disposal; and,

- The down-gradient analysis indicates that adverse impacts are not anticipated.

The Engineer shall consider the impact of infiltration on groundwater elevations both on site and on down-gradient properties. Approval of an infiltration system shall obligate the Owner to repair, replace, or reconstruct the infiltration system if it fails to operate as designed. The maintenance and operation schedule for an infiltration system shall include such a provision.

Minimum Requirements. In addition to the requirements specified in Section 5.8, infiltration facilities shall meet the minimum requirements described below.

General Report Requirements

Provide a written report which includes as a minimum: 1) Site characteristics that pertain to the proposed infiltration system; 2) Soils report with soil logs; 3) Written civil engineer's opinion of site suitability and recommended design infiltration rate; 4) Infiltration test data and results; 5) Engineering calculations supporting the design; and 6) Site plan. The Design Engineer shall demonstrate through; infiltration testing, soil logs, and a written opinion of a licensed civil/geotechnical engineer; that sufficient permeable soils exist on the site for an infiltration system meeting the requirements herein and site-specific conditions to function properly.

Facility Volume

The NRCS Type I 10-year 24-hour storm event is the design storm to be used for all flow control facilities that use infiltration. Storage volume for all infiltration facilities shall contain the 100-year developed runoff with spillways or overflow structures where applicable. Infiltration facility shall be sized using one of the following methods:

- Sized to contain the post development storm event and draw down time of 72 hours; or,
- Sized using the post development Level Pool Routing Method and a draw down time of 72 hours.

Pretreatment

Pretreatment is required for urban watersheds with more than 0.25 acres of impervious surface before the stormwater enters the infiltration facility;

- Pretreatment volume shall be equal to 20% of WQv. The pretreatment volume is in addition to the infiltration basin's WQv sizing requirement.

Infiltration Test Requirement

The design infiltration rate shall be determined using the following test methods:

- EPA Falling Head Percolation Test Procedure (Design Manual On-site Wastewater Treatment and Disposal Systems, EPA, 1980); or
- The Double Ring Infiltrometer Test (ASTM D3385).
- For new development or redevelopment with less than 10,000 square feet of new impervious surface the soil infiltration rates rate may be determined by one of the above methods or the Montana Department of Environmental Quality (DEQ) Circular 4 Percolation Test.

The test hole or apparatus is filled with water and maintained at depths above the test elevation for not

less than 4 hours. Following the saturation period, the rate shall be determined in accordance with the specified test procedures, with a head of 0.5 feet of water. Provide data sheets for the selected infiltration test performed. Testing is to be performed by or under the direct supervision of licensed civil engineer. The report shall bear the stamp of such licensed civil engineer.

The infiltration rate shall be measured at a depth equal to the proposed bottom grade of the facility. A detention system may be required in conjunction with the infiltration system to meter flows to an infiltratable rate.

The maximum infiltration rates for the various soil types are set forth in herein Table 5-2. The maximum rate used to calculate the design infiltration rate shall be the lesser of the values set forth in Table 5-2 and the measured rate.

Table 5-2
Maximum Infiltration Rates for Soil Types

Soil Texture Class (U.S.D.A.)	**Infiltration Rates (Inches per Hour)**
1. Coarse sands, cobbles	20
2. Medium sand	8
3. Fine sand, loamy sand	2.4
4. Sandy loam	1

Infiltration Rate Safety Factors.

To obtain the design infiltration rate, the following safety factors shall be applied depending on the test method selected:

EPA Method: F.S. = 2.0
ASTM Method: F.S. = 1.75

The safety factor shall be applied to the lesser infiltration rate, either the measured rate, or the tabulated rate in Table 5-2.

Geotechnical Report Requirement

An adequate number of test holes shall be located over the proposed site to substantiate representative conditions for the final layout of the development. As a minimum condition, one test hole shall be located in each infiltration area for each 5,000 square feet of tributary area runoff to be infiltrated. Test hole locations shall be clearly identified in the geotechnical report and labeled on the drainage plan. Soil logs must be submitted to described soil type and depth and a site map shall be submitted showing the location of each test hole.

Test pits or borings shall extend at least three (3) feet below the bottom of infiltration facilities. Soil logs shall include the depth to the seasonally high ground water table and imperious strata. The wet season water table elevation measurements shall be made during the period when the water table elevation is expected to be at its maximum (generally March to mid-June).

The geotechnical report shall address the potential impact of the infiltration system on down slope areas both on-site and off-site.

An inspection of the soil by a civil/geotechnical engineer shall be made after the system is excavated, before the gravel backfill is placed, to confirm that suitable soils are present. The geotechnical report shall be amended to reflect this inspection and confirmation of suitable soils.

Depth to Groundwater and Limiting Layer

- The base of the infiltration facility shall be $\geq$ 5 feet above the limiting layer (bedrock, clay lens, etc.); and,
- The bottom of the basins should be a least 3 feet above the seasonal high groundwater table.
    - The seasonal high water table would be based on long-term piezometer records during at least one wet season or the mottled soil layer as determined by a licensed geologist, licensed engineer with geotechnical expertise, or hydrogeologist.

Access and Setbacks

- Minimum infiltration facility setback restrictions:
    - Building Foundations: At least 50 feet up-slope and 20 feet down-slope of infiltration facility unless a reduction is geotechnically justified;
    - Back from top of slope greater than 15%: At least 50 feet or as determined by a licensed engineer with geotechnical expertise;
    - At least 200 feet from springs used for drinking water supplies;
    - Septic drain fields: At least 100 feet;
    - Shallow water supply wells (typically individual homeowner wells): At least 100 feet;
    - Easement, external tracts or property line: 20 feet; and ,
    - Floodplain: Outside 10-year High Water Level (HWL).
- Provide dedicated maintenance access route to infiltration facility from a public roadway. Access route to be dedicated by maintenance easement or drainage parcel.

Overflows

Each runoff control infiltration facility shall provide emergency surface storage for at least 10% of the 10-year, 24-hour design storm volume, a minimum of 0.5 feet deep, on the site prior to discharging runoff to a safe overflow route. The surface storage is intended to make the owner aware of a problem with the infiltration system. Overflows shall be routed to the municipal storm drainage system. The overflow route shall be shown on the plan.

Construction of Infiltration Systems

Excavation of infiltration systems shall be done with a backhoe or excavator working at "arms length" to avoid the compaction and disturbance of the completed infiltration surface. The facility site shall be cordoned off so that construction traffic does not traverse the area.

An inspection by the civil/geotechnical engineer of record or the exposed soil shall be made after the infiltration system is excavated to confirm that suitable soils are present. Infiltration areas shall not be: 1) driven on or across by any vehicles or equipment, 2) used for material storage or stockpiles, or 3)

used for vehicle or equipment parking.

Infiltration systems for runoff control shall not be utilized until construction is complete and disturbed areas have been stabilized, as determined by the City, to prevent sedimentation of the infiltration system. Temporary runoff control facilities may be needed to utilize this option. Infiltration facilities shall include observation wells.

Planting Requirements

- Plant basin with native vegetation containing a mixture of species of varying moisture tolerances. See Appendix 5A for planting guidelines.

Post Construction Verification

- Submit post-construction verification of volume and infiltration capacity:
    - Submit an as-built grading plan of the infiltration basin after construction to the City to verify the design storage volume has been provided; and,
    - Perform post-construction testing of actual short-term infiltration rates to ensure the basin functions as designed or corrective action will need to be taken.

5.7 Retention Facilities.

Retention facilities are used for storage of stormwater runoff when site conditions are not conducive to infiltration, and can be used for flow control provided that:

- The stormwater discharge is properly treated prior to the entering the facility; and,
- Retention facilities shall be sized for storage of the post-developed NCRS Type I 100-year 24-hour storm event.

Minimum Requirements. Retention facilities shall meet all requirement outlined for detention facilities and the additional requirements specified in Section 5.8.

5.8 Additional Requirements For All Flow Control Facilities.

The following minimum requirements shall be met for all flow control facilities:

General

The design of flow control facilities shall adhere to the following:

- Pond bottoms shall be located a minimum of 0.5 feet below the outlet to provide sediment storage. Sediment storage volume shall not be included in the design volume; and,
- In general, all pond bottoms shall be flat. Roadside swales are considered flat if the swale bottom slope is 1% or less. When calculating treatment volume, the designer can assume a flat bottom for swale/pond bottom slopes up to 1%.

Setbacks

- Setbacks for any detention pond, swale or ditch (measured from the maximum design operating depth) shall be at least 30 feet when located up-gradient or 10 feet when located down-gradient

from septic tanks or drain fields.

- Pond overflow structures shall be located a minimum of 10 feet from any structure or property line. The toe of the berm or top of bank shall be a minimum of 5 feet from any structure or property line.
- Building Foundation: At least 50 feet;
- Easement or property line: 20 feet from the top of the facility's slope;
- Floodplain: Outside 10-year High Water Level (HWL); and ,
- Drainage facilities located at, or adjacent to, schools, nursing homes, day-cares, or similar facilities: At least 200 feet.

Drawdown Time

Detention and infiltration facilities shall have a minimum subgrade infiltration rate of 0.5 inches/hour and drain completely within 72 hours after a storm event.

Side Slopes

Pond side slopes shall meet one of the following requirements:

- Interior side slopes shall not be steeper than 3H:1V;

Emergency Overflow Spillway

An emergency overflow spillway shall be provided to bypass the 100-year developed peak flow toward the downstream conveyance system in the event of plugged orifices or high flows that exceeds the design storm.

Emergency overflow spillways shall be analyzed as broad crested trapezoidal weirs and comply with the following requirements:

- The spillway shall have the capacity to pass the 100-year developed peak flow;
- The full width of the spillway shall be armored with riprap and extend downstream to where emergency overflows enter the conveyance system;
- Rip rap shall extend just beyond the point that bank and stream bed erosion occurs;
- If the detention/infiltration facility is located on an embankment, the overflow spillway shall be armored to a minimum of 10 feet beyond the toe of the embankment;
- The overflow path shall be identified on the construction plans and easements shall be provided as necessary.

Engineers may choose to design the detention pond multi-stage outflow structure with an emergency bypass that can route the 100-year storm through the structure and out of the pond directly into the conveyance channel. However, due to the high potential for sedimentation and plugged orifices within these structures, an emergency overflow spillway shall still be provided in order to reduce the potential for a pond berm breach for detention ponds that require an emergency overflow spillway.

Fencing

Fencing or other barriers may be required to protect the health, welfare and safety of the public for ponds with standing water over 4 feet deep. At the discretion of the City Engineer, if a pond is proposed as an amenity (i.e. enhancements to the disposal facility are proposed, such as rocks, boulders, waterfalls, fountains, creative landscaping or plant materials), the design will be reviewed on a case-by-case basis, such that the fencing requirements may be reduced or waived. At the discretion of the City Engineer, marking fences, terraces, shallower side- slopes, egress bars, etc. may be allowed instead of fencing.

Planting Requirements

Exposed earth on the pond bottom and interior side slopes shall be sodded, seeded or vegetated in a timely manner, taking into account the current season. Unless a dryland grass or other drought tolerant plant material is proposed, irrigation shall be provided. All remaining areas of the tract or easement shall be sodded or planted with dryland grass or landscaped. Refer to Appendix B for planting guidelines.

Landscaping

Where space and circumstances allow, the landscaping scheme and common use areas shall be integrated with the open drainage features and into the overall stormwater plan. Plants other than turf grass have characteristics that can provide additional stormwater management benefits such as enhanced evapotranspiration and improved soil-holding capabilities. The following general principles should guide the landscaping and selection of plants in conjunction with stormwater facilities:

- Supplemental landscaping areas should be grouped into irregular islands and borders outside of the immediate stormwater facilities and not uniformly dispersed throughout them. The constructed stormwater features should be irregular and curved in shape to look more natural. Avoid straight lines and regular shapes where and when possible;
- Trees and shrubs shall not be planted within 10 feet of drainage appurtenances such as outlet control structures, manholes, catch basins, inlets and outlets, spillways, storm drain lines, and underground disposal structures such as drywells or drain-fields. The minimum spacing between the tree or shrub and the drainage structure shall be equal to the crown diameter of the mature plant;
- Trees and shrubs shall not be planted within the treatment, storage, and conveyance zones of swales, ponds, and open channels, unless treatment and storage calculations take into account the mature tree size and allow runoff to reach the drainage facilities;
- Self-limiting plants shall be used, not spreading or self-seeding types;
- Full-size forest trees and trees with aggressive root systems should not be used except where space and circumstances allow. Deciduous trees with heavy shade and leaf-fall should also be avoided to allow the survival of the surrounding grass areas and not plug drainage facilities;
- Shrubs should be upright in form and groundcovers should have neat growth patterns to assist in their maintenance and that of the surrounding grass areas; and,
- The plant selection needs to consider the native soil conditions and altered moisture conditions created by the stormwater facilities. The plants need to be adaptable to the changes in site conditions. Plants that are self- sufficient and self-limiting do not require year-

round irrigation and require minimal care are encouraged. Guidelines for plantings are listed in Appendix B.

5.9 Floodplains.

In the City of Whitefish, floodplain requirements are administered by the City Planning Department. Contact the City Flood Plain Administrator for more information and specific requirements.

5.10 Preservation of Natural Drainage Ways (Critical Stormwater Conveyances).

New development shall be designed to protect existing natural drainage features that convey or store water or allow it to infiltrate into the ground in its natural location. Preserving the natural drainage ways, referred to as critical stormwater conveyances in the Critical Areas Ordinance, will help ensure that stormwater runoff can continue to be conveyed and disposed of at its natural location. Preservation will also increase the ability to use the predominant systems in conjunction with regional stormwater facilities. All proposed construction projects must complete a Critical Areas Checklist (see Section 1.16) and identify on that checklist the presence of a natural drainage way (critical conveyance).

Design Requirements
Constructed and natural channels that are altered shall be designed with sufficient capacity to convey, at a minimum, the depth associated with the 100-year 24-hour storm peak flow rate, assuming developed conditions for on-site tributary areas and existing conditions for any off-site tributary areas.

Definitions
Drainage ways that need to be preserved have been mapped and this map is available from the Public Works Department. The maps denoting these drainage ways are not definitive. The maps are only one tool that may be used to identify existing natural drainage ways; field verification will typically be required to fully identify the existence of a drainage way and its significance with regard to a natural conveyance system.

Because every site is unique, the City Engineer shall make interpretations, as necessary, based on site visits and technical information as to the exact location on a project site. The City Engineer may also require the project owner to provide engineering information to assist in this determination.

All projects shall be reviewed for the presence of natural drainage ways, and a determination will be made as to their significance with regard to preservation of natural conveyance and potential use as part of a regional system.

Protection

- No cuts or fills shall be allowed in predominant natural drainage ways except for perpendicular driveway or road crossings with engineering plans showing appropriately sized culverts or bridges. Natural drainage ways shall be preserved for stormwater conveyance in their existing location and state, and shall also be considered for use as regional facilities;
- Less prominent drainage ways in a non-residential development and in a residential

development containing lots 1 acre or smaller may be realigned within the development provided that the drainage way will enter and exit the site at the pre-developed location and that discharge will occur in the same manner as prior to development;

- Realignment of a less prominent drainage way shall be defined as still following the "basic" flow path of the original drainage way. An acceptable example would be if the drainage way is proposed to be realigned such that it will follow a new road within the proposed development, and will be left in its existing state or utilized as part of the project's on-site stormwater system.
- Stormwater leaving the site in the same manner shall be defined as replicating the way the stormwater left the site in its existing condition. If the drainage way is preserved in its existing location and is left undisturbed, this goal should be met;
- If the City Engineer accepts the proposal to allow a less predominant drainage way to be routed through the site via a pipe or approved drainage material, the following additional criteria shall be met:
    - Where the less prominent drainage way enters the site, the design shall ensure that the entire drainage way is "captured" as it enters the site; i.e. the surrounding property shall not be regraded to "neck-down" the drainage way so that it fits into a drainage easement or tract or structure intended to capture and reroute the off-site stormwater runoff;
    - Where the less prominent drainage way exits the site, the design shall ensure that the stormwater leaves the pipe, pond or structure a significant distance from the edge of the adjacent property so that by the time the stormwater reaches the property boundary, its dispersal shall mimic that of the pre-developed condition; and,
    - Since some of the less prominent drainage ways may also be useful for managing regional stormwater, if identified as a significant drainage way (i.e. necessary conveyance for flood control, or being considered as a connection to a planned regional facility or conveyance route), then the drainage way may be subject to the same limitations and criteria as a predominant drainage way.

- The size of the tract or easement containing the drainage way shall be determined based on an analysis of the existing and proposed stormwater flows directed to these drainage systems and any access and maintenance requirements found in this manual; and,
- All new development containing lots that are 1 acre or smaller shall be required to set aside the drainage way as open space in a separate parcel. For new development containing lots that are greater than 1 acre, the drainage way may be set aside in either a parcel or an easement.

5.11 Water Quality Treatment Standards.

Water quality treatment facilities are designed to remove pollutants contained in stormwater runoff. The pollutants of concern include sand, silt, and other suspended solids; dissolved metals such as copper, lead and zinc; dissolved nutrients such as nitrogen and phosphorus; certain bacteria and viruses; and organics such as petroleum hydrocarbons and pesticides.

Many treatment facilities, if designed correctly, can function as both a water quality treatment facility and a flow control facility. This section describes design criteria for water quality treatment and Section 5-5 provides design criteria for flow control.

Stream and River Flow Control Standard

- Post development runoff rate shall be limited to no more than 50% of the pre-development 2-year, 24-hour peak runoff rate (based on SCS Type 1 unit hydrograph); and,
- The post development 10-year peak runoff rate shall be no greater than the pre-development 10-year, 24-hour peak runoff rate (based on SCS Type 1 unit hydrograph).

Wetland Standards

- An on-site wetland assessment is required for all new development. General wetland mapping for the Whitefish planning area is available through the Planning Department.

Water Quality Volume (WQv) Standard

- The water quality volume for the design of BMPs is based on a snowmelt event. The design volume is the runoff from **1.1 inches** of equivalent snow pack moisture.

  The treatment volume in cubic feet is determined by multiplying the site area in square feet, by 1.1 inches (0.09 ft). Best Management Practices are designed to capture and provide treatment for a specific volume of stormwater runoff. This volume is equivalent to the runoff from an 80th percentile storm, meaning that 80 percent of the most frequently occurring storms are fully captured and treated. Frequent small storm events, known as "first-flush events" carry the majority of stormwater pollutants. The primary pollutant removal mechanism consists of physical settling of suspended sediments and associated adsorbed pollutants. Secondary pollutant removal mechanisms include filtering, biological uptake and adsorption.

Water Quality Treatment BMPs.

General guidance for water quality treatment is provided in various stormwater design and BMP manuals including Section 10 of the HEC-22 Manual and the Stormwater BMP Design Supplement for Cold Climates.

The following BMP design manual has adapted treatment methods to cold climates such as that of Whitefish:

Minnesota Urban Small Sites BMP Manual available at
www.metrocouncil.org/environment/watershed/bmp/manual.htm.

Another BMP design reference guide that is available online is:

City of Knoxville BMP Manual
www.ci.knoxville.tn.us/engineering/bmp_manual

The stormwater design report must include a water quality treatment section that describes the Best Management Practices that are chosen to treat the water quality design storm. The chosen BMPs should be tailored to the needs of the site and the anticipated characteristics of storm water generated. Infiltration techniques may be allowed where soil and groundwater conditions are suitable. The stormwater plan and report must provide specifics on the operation, maintenance and inspection of the

water quality treatment facilities. Easements must be provided for maintenance of the facilities. The use of multiple complimentary practices is encouraged. All treatment BMP facilities shall be installed upstream of flow control facilities.

Description of Best Management Water Quality Practices. This section describes typical water quality practices and provides general guidelines for their use.

A. **Infiltration ponds and trenches** - The infiltration section of these standards, section 5.5, provides further guidance on appropriate use of these stormwater management methods.

B. **Dry wells** - A subsurface storage facility that receives and temporarily stores roof runoff. This runoff is discharged through infiltration to the surrounding soil. A dry well may be either a structure and/or excavated pit filled with aggregate. Runoff should drain within 72 hours. The maximum drainage area to a dry well is 1 acre and dry wells should be applied to relatively small sites. In Montana the EPA has permitting authority over installation of dry wells.

C. **Porous pavement** – A permeable pavement surface with an underlying stone reservoir to temporarily store surface runoff before it infiltrates into the subsoil. This porous surface replaces traditional pavement, allowing parking lot stormwater to infiltrate directly and receive water quality treatment. The ideal application for porous pavement is for low-traffic or overflow parking areas. The base of the stone reservoir should be below the frost line to reduce the risk of frost heave. Porous pavement cannot be used where sand is applied because sand will clog the surface of the material.

D. **Vegetated filter strip** – Treats sheet flow from adjacent surfaces. Filter strips function by slowing runoff velocities and filtering out sediment and other pollutants, and by providing some infiltration into underlying soils. With proper design and maintenance, filter strips can provide relatively high pollutant removal. However, it is difficult to maintain sheet flow, so the practice may be "short circuited" by concentrated flows, receiving little or no treatment. Filter strips are best suited to treating runoff from streets, roof downspouts, and small parking lots. Typically, filter strips are used to treat very small drainage areas. The limiting design factor, however, is not the drainage area but the length of flow leading to it. When flow concentrates, it moves too rapidly to be effectively treated by a grassed filter strip.

E. **Vegetated swale** – Vegetated swales are vegetated, open channels designed to treat and attenuate stormwater runoff. As stormwater runoff flows through these channels, it is treated through filtering by the vegetation in the channel, filtering through a subsoil matrix, and/or infiltration into the underlying soils. Variations of the grassed swale include the grassed channel, dry swale, and wet swale. The specific design features and methods of treatment differ in each of these designs, but all are improvements on the traditional drainage ditch.

   Vegetated swales should generally treat small drainage areas of less than 5 acres. If the practices are used to treat larger areas, the flows and volumes through the swale become too large to design the practice to treat stormwater runoff through infiltration and filtering. Grassy swales are designed to have a gentle slope between 0.5% and 5%. An underdrain may be required for

slopes less than 1.5% if significant amounts of standing water remain after a storm event. Side slopes may not exceed 4 horizontal to 1 vertical, and should be minimized to the extent possible. Maximum surrounding ground slopes should be 10% to reduce the velocity of incoming water. The minimum length for swales is 20 feet. Check dams need to be added when steep slopes create erosive runoff velocities.

Facility storage depth may range from 6 to 12 inches. A freeboard (6 to 12 inches) is required if the adjacent area may be damaged in the case of flooding. The minimum bottom width is 2 feet with a minimum total width of 8 feet. If stormwater will enter the swale through a pipe or other point source, an inlet flow spreader is required; for long swales, additional flow spreaders or check dams are recommended every 12 t0 20 feet. River rock can be used to create an attractive, effective check dam.

Curb cuts- An energy dissipater is required at curb cuts to prevent erosion. Also, provide a concrete spillway at curb cut to prevent grass from blocking the flow of water. Tire stops or curbs with curb cuts should be located 6 inches back from the edge of the swale.

F. **Bioretention** - Landscaping features adapted to provide on-site stormwater treatment. They are commonly located in parking lot islands or within small pockets of residential land. Surface runoff is directed into shallow, landscaped depressions. These depressions are designed to incorporate many of the pollutant removal mechanisms that operate in forested ecosystems. During storms, runoff ponds above the mulch and soil in the system. Runoff from larger storms is generally diverted past the facility to the storm sewer system. The remaining runoff filters through the mulch and prepared soil mix. Typically, the filtered runoff is collected in a perforated subdrain and returned to the storm sewer system. Bioretention should be used on small sites of 5 acres or less. When used to treat larger areas, they tend to clog. In addition, it is difficult to convey flow from a large area to a bioretention area.

G. **Wet pond** (stormwater pond, retention pond, wet extended detention pond) – Constructed basins that have a permanent pool of water. Ponds treat incoming stormwater runoff by settling and algal uptake. The primary removal mechanism is settling as stormwater runoff resides in this pool, and pollutant uptake, particularly of nutrients, also occurs through biological activity in the pond. Wet ponds are among the most cost-effective and widely used stormwater practices. While there are several different versions of the wet pond design, the most common modification is the extended detention wet pond, where storage is provided above the permanent pool in order to detain stormwater runoff to provide settling. Wet ponds need sufficient drainage area to maintain the permanent pool, typically about 25 acres.

H. **Level Spreader** – An outlet constructed at zero grade consisting of a vegetated or rock-surface structure, used to disperse or "spread" concentrated flow thinly over a receiving area. The purpose is to spread runoff over a wide area to prevent erosion of the receiving area. Additional benefits of infiltration and filtration may also occur. This practice applies where concentrated flow is dispersed within wooded areas adjacent to bodies of water and in areas requiring a filter strip to treat water. Its use should also be limited to drainage areas less than ten acres and where receiving areas have relatively flat slopes.

I. **Soil Amendment** – Material added to a soil to improve its physical properties, such as water retention, permeability, infiltration, drainage, aeration and structure. Soil amendments increase the spacing between soil particles so that the soil can absorb and hold more moisture. This in turn reduces runoff. The amendment of soils changes physical, chemical and biological characteristics so the soils become more effective in maintaining water quality.

J. **Enhancement Options for Dry Detention Ponds** (Extended Dry Detention Ponds) – Dry detention ponds are typically designed to empty in less than 24 hours, resulting in lower contaminant removal than wet ponds. If water quality is the intended goal of the pond, a wet or extended detention pond design should be considered. Dry detention ponds may be used, however, as part of an overall water quality treatment train approach. For greater details and for design issues specific to cold climates see the ***Minnesota Urban Small Sites BMP Manual***. The following are design alternatives that enhance the treatment potential of dry detention ponds:

- Sediment Forebay. The treatment efficiency of a dry pond can be increased by incorporating a forebay into the pond design. A sediment forebay facilitates maintenance and improves pollutant removal by trapping larger particles near the inlet of the pond. The forebay should include a deep permanent pool (greater than 3 feet) to minimize the potential for scour and re-suspension.

- Extended Storage. Traditional dry ponds have rarely been considered acceptable ponds from a water-quality perspective. The potential for scour and small detention times almost always eliminates these ponds from consideration as a water quality BMP. However, designs that eliminate scour by controlling the flow through the pond can provide acceptable treatment. Enhanced dry ponds that utilize extended storage principles can serve to meet water quality goals; however, they must be carefully and properly designed, implemented and maintained. To operate properly these treatment systems need outlet controls with filters, weirs or other energy-dissipation and flow-spreading devices constructed as part of the pond.

- Micropool at the Outlet. The performance of a dry pond can be enhanced through the provision of a micropool at the outlet. The micropool is typically relatively shallow and underdrained. Its purpose is to concentrate finer sediment and reduce re-suspension. The micropool is normally planted with hardy wetland species such as cattails.

- Pond Shape. To maximize the treatment potential of the pond, the inlet and outlet should be positioned in such a way that short-circuiting in the basin is minimized. Ponds that are considerably longer than wide will likely provide additional detention time for settling and biological treatment. Baffles and curved flow paths can also be used to increase settling efficiency. A pond with a length to width ratio >3:1 will have an acceptable flow path.

- Energy dissipation around inlet. This minimizes erosive energy and spreads the water.

- Vegetate and stabilize the pond surface. A vegetated pond bottom, such as grass, treats early inflow and prevents erosion of the pond's soil surface.

K. **Site Design BMPs**. Site design BMPs that may be incorporated include reducing the amount of impervious surfaces, conserving natural areas, minimizing directly connected areas, and protecting slopes and channels.

L. **Structural Treatment BMPs**. Use of Structural Treatment BMPs in a design plan must be accompanied by a report that provides the basis for selection, design criteria, pollutant removal information, and maintenance requirements.

5.12 Whitefish Lake Regulations.

Whitefish Lake Water Quality Plan. All development of property that abuts the lake shall submit a water quality protection plan in accordance with section 5.11. The water quality protection plan shall be developed a qualified professional, which shall make recommendations regarding stormwater management, impervious surface, grading and filling, and vegetation protection and restoration so that the estimated discharge of sediment, nutrients, and other pollutants to the lake during and after construction would be no greater than if the site had a seventy-five (75) foot buffer.

Whitefish Lake Lakeshore Regulations. Whitefish Lake and Lakeshore Protection Regulations require permits for construction within thirty (30) horizontal feet of the perimeter of the lake (mean annual high water).Any construction activity which will affect the lakeshore protection zone should incorporate all necessary means to prevent pollution of the lake, including erosion, sediment, and storm runoff controls. The proposed activity should not cause, directly or indirectly, increased sedimentation, an increase in suspended sediments, or an increased discharge of nutrients into the lake either during its construction or utilization. For details on the lake regulatons and mean annual high water elevation refer to Title 13 Lake and Lakeshore Protection Regulations of the Municipal Code.

5.13 Maintenance of Stormwater Facilities.

Insufficient maintenance of stormwater control facilities can lead to poor performance, shortened life, increased maintenance and replacement costs, and property damage. The City of Whitefish maintains the stormwater system structures located within the public road right of way. The project Owner is to provide for the perpetual maintenance of all elements of the stormwater system located outside the public right of way. The high-frequency maintenance of vegetated cover, turf grass, and other landscaping within the public right of way and within easements that accommodate public road runoff is the responsibility of the adjacent property owner. See Appendix 5A for an example Site Inspection Checklist. When applicable, the following maintenance-related items shall be submitted with the Drainage Submittal for all projects:

- A copy of the conditions, covenants and restrictions (CC&Rs) for the homeowners' association (HOA) in charge of operating and maintaining all elements of the stormwater system;
- A Financial Plan outlining the funding mechanism for the operation, maintenance, and repair

of the private stormwater system, including contingencies; and,
- An Operations and Maintenance (O&M) Manual.

Homeowners' And Property Owners' Associations.
For privately maintained stormwater systems in residential neighborhoods, a homeowner's association, or alternate entity acceptable to the City, shall be formed to maintain the facilities located outside of the public right-of-way.

A draft copy of the CC&Rs for the HOA in charge of operating and maintaining the facilities associated with the stormwater system shall be submitted as part of the Drainage Submittal review package. The CC&Rs shall summarize the maintenance and fiscal responsibilities of the HOA and reference the O&M Manual. HOA dues shall provide funding for the annual operation and maintenance of all facilities associated with the stormwater system. See Appendix O for a sample document.

For commercial/industrial and multi-family residential developments with joint stormwater systems and multiple owners, a property owners' association (POA) or similar entity such as a business shall be formed, or a reciprocal-use agreement executed.

Homeowners' associations and property owners' associations are to be non-profit organizations. A standard business license is not acceptable for this purpose.

Operation And Maintenance Manual.
For stormwater systems operated and maintained by a HOA,or POA an O&M Manual is required. The O&M Manual summarizes the tasks required to ensure the proper operation of all facilities associated with the stormwater system and must include, as a minimum:
- Description of the entity responsible for the perpetual maintenance of all facilities associated with the stormwater system, including legal means of successorship;
- Description of maintenance tasks to be performed and their frequency;
- An inspection check list to be used for the annual maintenance inspections.
- A list of the expected design life and replacement schedule of each component of the stormwater system; and,
- A general site plan (drawn to scale) showing the overall layout of the site, all the facilities associated with the stormwater system, and their elevations.

Financial Plan.
A Financial Plan is required in order to provide the entity responsible for maintenance with guidance with regard to financial planning for maintenance and replacement costs. The Financial Plan shall include the following items:
- A list of all stormwater-related facilities and their expected date of replacement and associated costs;
- Sinking fund calculations that take into consideration probable inflation over the life of the infrastructure and estimates the funds that need to be set aside annually; and,
- A mechanism for initiating and sustaining the sinking fund account demonstrating that perpetual maintenance of all facilities associated with the stormwater system will be sustained.

If the required maintenance and repairs are not being performed and inhibit the intended function of the stormwater system the City will hire a contractor to perform the required maintenance and all such expenses shall be borne by the HOA, POA, or responsible property owner.

Parcels And Easements.
Flow control and treatment facilities must be located within an individual parcel. For lots larger than 1 acre, the drainage facility may be located within a drainage easement if the facility does not occupy more than 10% of the lot and does not straddle private property lines. Stormwater facilities serving commercial projects do not generally require parcels or easements unless they serve more than one parcel.

A stormwater facility, as defined for this section, is a natural drainage way, constructed conveyance, swale, or flow control facility. It is acceptable for other types of drainage systems, such as a pipe, to be in a drainage easement. Other stormwater drainage systems in a drainage easement, such as pipes, shall not straddle private property lines.

Parcels.
A drainage parcel for access, maintenance, operation, inspection and repair shall be dedicated to the entity in charge of the maintenance and operation of the stormwater system. A parcel will be dedicated when any of the following situations are present:

- Facilities associated with a stormwater system serving a residential development are located outside of the public right of way;
- Drainage ditches are located in residential neighborhoods. The limits of the parcel may have to be delineated with a permanent fence when the ditch is located near property lines; or,
- A natural drainage ways is present.

Parcels shall be of sufficient width to provide access to, and maintain, repair or replace elements of, the stormwater system without risking damage to adjacent structures, utilities and normal property improvements, and without incurring additional costs for shoring or specialized equipment.

Easements.
A drainage easement for access, maintenance, operation, inspection, and repair shall be granted to the entity in charge of the maintenance and operation of the stormwater system. The easement shall grant to the City of Whitefish the right to ingress/egress over the easement for purposes of inspection or emergency repair. If not in a parcel, the following infrastructure shall be placed within drainage easements:

- Elements of a stormwater system, such as a pipe, located outside the public right-of-way. Easements for stormwater conveyance pipes shall be of sufficient width to allow construction of all improvements, including any associated site disturbances, and access to maintain, repair or replace the pipe and appurtenances without risking damage to adjacent structures or incurring additional costs for shoring or special equipment.
    - No storm pipe in a drainage easement shall have its centerline closer than 5 feet to a private rear or side property line.
    - The storm drain shall be centered in the easement.
    - The minimum drainage easement shall be 20 feet.

    - The drainage easement shall not straddle lot lines;
- For drainage ditches and natural drainage ways, the easement width shall be wide enough to contain the runoff from a 100-year 24 hour storm event for the contributing stormwater basin. Constructed drainage ditches will not be allowed to straddle lot lines. Natural drainage ways located on lots larger than 1 acre may be placed in an easement; and,
- Easements for access roads and turnarounds shall be at least 20 feet wide.

Easement documents shall be drafted by the project owner for review by the City Engineer and recorded by the project owner. An example stormwater facility easement document is provided in Appendix O.

5.14 Pumping Systems

Storm water pumping stations are not acceptable for use within the City of Whitefish City Limits without approval from the City of Whitefish Public Works Department.

Pump systems (includes the pumps, force mains, electrical and power supply equipment, structures and appurtenances) are not an approved method of conveying, storing, or treating storm water. A deviation must be approved in order to pump storm water. The pump system shall not be used to circumvent any code, engineering standard, or permit condition. The construction and operation of the pump system shall not violate any other City requirements.

The Developer shall demonstrate that the pump system is the only feasible alternative available to provide drainage. Pump systems shall be owned, operated, maintained, repaired, and replaced (as needed) by property owner(s) served by such system. Each pump shall be capable of discharging the design flow rate for the 100-year, 24-hour design storm.

The pump system shall have dual, alternating pumps with emergency on-site, back-up power supply and an external alarms system for system failure and high water level indicator. A safe emergency overflow route shall be provided, if possible. A Maintenance and Operation Schedule shall be prepared and submitted for review prior to permit insurance. A note on the approved plan shall stipulate that the private property owner(s) shall be responsible for any and all claims for injuries and damage due to the operation or non-operation of the pump equipment.

5.15 Easement Requirements.

Where possible, public conveyance systems shall be constructed within the public right-of-way. When site conditions make this infeasible, public utility easements or dedicated tracts shall be provided. Private drainage facilities shall be constructed outside of the public right-of-way, on private property.

When vehicles access for maintenance is required, a dedicated tract or access easement shall be provided. The access easement conditions shall prohibit the property owner from installing any landscaping, improvements, retaining walls, etc., which would hinder access to the drainage facility or necessitate restoration of access easement area.

For pipes/vaults 5 feet and greater in width, the minimum utility easement width shall be outside

dimension plus 15 feet, rounded to the nearest whole foot, but not less than 20 feet in width. For maintenance access roads, the minimum access easement width shall be 15 feet.

5.16 Illicit Connections.

Federal regulations define an illicit discharge as "any discharge that is not composed entirely of storm water…." Examples of illicit discharges include; improperly connected/maintained sanitary sewers, dewatering construction sites (construction water requires pretreatment and/or a permit prior to discharge into the stormwater system), equipment washing, and improper vehicle/machinery maintenance.

Runoff that is discharged into a stream shall meet the Natural Resources Conservation Service standards and comply with Montana Department of Environmental Quality, and NPDES Phase II Requirements as applicable. Also, drainage and dewatering systems shall not discharge into any sanitary sewer facility.

APPENDIX 5A

EXAMPLE

Site Inspection Checklist

Inspection # _____ Final? – Yes / No

Date: _____ Time: _____ Weather: _____

Construction inspector: _____

Project name: _____

Address: _____

Proposed use of this property: _____

Site development classification: SSFR *or* LRCD Zoning classification: _____

Erosion and Sediment Control:

	Yes	No	N/A
1. Is there a good stand of grass on all areas disturbed by construction?			
2. Is there a good stand of grass within all ditches and swales?			
3. Is there a good stand of grass within the detention basin?			
4. Are erosion and sediment control devices properly installed at the correct locations?			
5. Is there any evidence of erosion or sedimentation downstream from the project site?			

Storm Drainage Structures: (catch basins, inlets, manholes, junction boxes)

	Yes	No	N/A
1. Are all drainage structures installed at the proper location per approved plans?			
2. Are all drainage structures installed at the proper grade and cross slope?			
3. Are curb irons and manhole lids installed correctly? Proper size?			
4. Do curb irons and manhole lids have anti-pollution message per COK standard details?			
5. Are structure inverts shaped to prevent ponding water? Free from silt and debris?			
6. Are pipes properly grouted and fitted into each drainage structure?			

Storm Drainage Pipes:

	Yes	No	N/A
1. Has the proper aggregate backfill been used (Class A Grade D)? Adequately compacted?			
2. Does pipe size and pipe material agree with the approved plans?			
3. Does the location and grade of storm drainage pipes agree with the approved plans?			
4. Are pipe sections joined correctly (coupling bands for CMP, joints, gaskets, etc.)			
5. Are pipes in good condition and undamaged?			
6. Are proper outlet structures, headwalls, riprap or other erosion control measures in place?			

Ditches and Swales:

	Yes	No	N/A
1. Are the ditches and swales located per the approved plans?			
2. Does the constructed cross section (width, depth) agree with the approved plans?			
3. Are erosion control measures in place? Riprap?			

Stormwater Quality Structure: (O/W separator, sand filtration device, etc.)

	Yes	No	N/A
1. Is the correct brand, size, and model installed as per approved plans?			
2. Is the structure installed at correct location, grade and elevation as per approved plans?			
3. Is the structure located within the designated easement?			
4. Are liftholes plugged and all joints sealed to prevent leakage?			

Stormwater Detention Basin:

	Yes	No	N/A
1. Was Detention Basin installed as first item of construction, to prevent erosion/sediment?			
2. Does the basin size and location agree with the approved plans & detention calculations?			
3. Is the basin located within the detention basin easement, including fill and cut slopes?			
4. Is the bottom of the detention basin graded to the outlet structure to prevent ponding?			
5. Is there a good cover of vegetation on the slopes and bottom (to prevent erosion)?			
6. Is the outlet structure constructed to agree with approved plans & detention calculations?			
7. Are the detention basin slopes at the approved grades (no steeper than 2:1 H:V)?			
8. Is the detention basin berm graded at the proper elevation and width, all the way around?			
9. Is the first flush volume adequate? With a controlled release over 24 hours?			
10. Is there any evidence of utility lines or pipes within the detention basin easement?			

Streets:

	Yes	No	N/A
1. Are streets in good condition and free from damage? (no cracks, upheaval or settlement)			
2. Are the streets located correctly as per approved plans? Curves (PC, PT, tangents)?			
3. Are the street widths adequate?			
4. Does the street cross section (pavement and base depths) meet the approved plans?			
5. Are streets crowned and gutters graded properly to prevent ponding?			
6. Has the curb been backfilled?			
7. Is there a good stand of grass within the street right-of-way?			
8. Are street signs in compliance with City and FHWA standards and installed properly?			
9. Are pavement markings, lines and symbols correct?			
10. Have streetlights been installed correctly with adequate setbacks?			
11. Have property pins been set and protected?			
12. Are entrance signs and other structures located outside of the street right-of-way?			

Curbs and Sidewalks:

	Yes	No	N/A
1. Are curbs and sidewalks in good condition and free from damage?			
2. Does the location, type, and height of curb and gutter agree with the approved plans?			
3. Are the curb and sidewalk radii and curves correct for all entrances and cross streets?			
4. Are curb contraction joints installed with 5 ft maximum spacing?			
5. Are curb expansion joints installed with 25 ft maximum spacing and at fixed objects?			
6. Is the sidewalk width and location adequate?			
7. Are sidewalk cross sections adequate, with proper finishing and joints?			
8. Are sidewalk ramps and cuts installed to meet ADA requirements?			

Entrances and Driveways:

	Yes	No	N/A
1. Do the entrance and driveway widths match the approved plans?			
2. Are the entrance and driveway radii adequate for each property?			
3. Are the entrance and driveway cross sections adequate, with proper finishing and joints?			
4. Are sight distances adequate, with no obstacles such as trees, fences or signs?			

Retaining Walls:

	Yes	No	N/A
1. Are retaining walls located as per approved plans?			
2. Do the retaining walls agree with the approved height, length, and construction material?			
3. Do the retaining walls have sufficient footer size and steel reinforcement?			
4. A detailed construction inspection is required for retaining walls over 4 feet in height.			
5. Has the contractor been notified of the requirements regarding 3rd party inspection?			

SECTION 6
GEOTECHNICAL SITE CHARACTERIZATION

6.1 Introduction.

This Section does not apply to the construction of single family homes or duplexes unless the project's stormwater design includes an infiltration system and the project creates greater than 5,000 square feet of new impervious area. This Section outlines the minimum requirements for a geotechnical site characterization (GSC), which is used in developing recommendations for stormwater disposal and determining the feasibility of constructing sub-level structures in potentially high groundwater areas. A qualified geotechnical engineer (a professional engineer currently licensed in the State of Montana with geotechnical engineering as a specialty) is required to perform the GSC. Hydrogeologists, engineering geologists, and civil engineers may prepare sections of the geotechnical site characterization study, excluding structural, and foundation design.

The following geotechnical studies, if required, can be performed at the same time as the GSC:

- Geohazard analysis;
- Pavement subgrade evaluation;
- Down-gradient analysis;
- Embankment recommendations for proposed disposal facilities that would impound stormwater; and
- Recommendations for all cut and fill slopes.

Contact the City Engineer for specific requirements with regard to geohazardous areas and road surfacing. The requirements of this Section are in addition to any field or laboratory testing that may be required, or recommended by the project engineer, with regard to footings, foundations, utility work, etc.

In known drainage problem areas, the geotechnical engineer may make recommendations on the feasibility of sub-level structures based on the information available from the initial site investigation.

6.2 Applicability.

The scope and geographic extent of the investigation may vary depending on the general location and setting of the site, the characteristics of the target soil layer, and whether there are known or anticipated drainage problems in the vicinity of the site.

A GSC is required for:

- Projects proposing infiltration (infiltration facilities, detention facilities receiving credit for pond bottom infiltration, etc.), drywells, or non-standard drainage systems that also

create greater than 5,000 square feet of new impervious area; or

- Projects located within or draining to a drainage problem area as recognized by the City Engineer or within an area mapped by the City as having the potential for high groundwater.

6.3 Geotechnical Site Characterization Report.

The following are minimum requirements for the GSC:

- The Study shall include:
    - A surface reconnaissance of the site and adjacent properties to assess potential impacts from the proposed stormwater system and to verify that the conditions are consistent with the mapped information. Typically, the evaluation should extend a quarter of a mile down gradient. Where access to adjacent properties is unavailable, the project owner shall rely upon the best known information for the area, supplemented with information available from the City Engineer, including any existing geotechnical engineering reports or studies for sites in the vicinity;
    - A review of available geologic, topographic, and soils, and identify any site conditions that could impact the use of storm drainage systems or the construction of sub-level structures. This review shall include all available previous geotechnical engineering reports or studies for sites in the vicinity; and,
    - An evaluation of the potential impacts of groundwater on the proposed storm drainage facilities, roadways and proposed underground structures, when a seasonally high groundwater table is suspected.
- The Report Narrative shall include:
    - A brief project description including size, number of lots proposed, project location (section, township and range), and background information relevant for drainage design;
    - A discussion of the study investigations;
    - A description of the soil units on the site and in the vicinity of the site;
    - A description of the site including surface, soil, and groundwater conditions, etc; and,
    - Conclusions and recommendations.
- The Site Plan shall include:
    - Project boundaries (including all existing and proposed property lines);
    - Labeled topographic contours, extending beyond the project and drainage basin. Projects in an urban area shall use a maximum contour spacing of 1 foot;
    - Location of the soil units identified;
    - Location of significant structures, properties or geologic features on site and in the project vicinity;
    - Location of existing natural or constructed drainage features on site and in the project vicinity; and,

    - Location of proposed site infrastructure including roadways and drainage features such as ponds, drywells, etc.
- Test Method Documentation shall include:
    - A map with the location of all subsurface field explorations and any in-place field tests;
    - A description of any difficulties encountered during excavation and testing;
    - A description of the equipment used to perform the field explorations or tests. When applicable, describe the type of fabric lining and gravel backfill used;
    - Logs of subsurface explorations which shall identify the depth to groundwater, the presence of any limiting layers and the target soil layer; include test pit or excavation dimensions, with photographs, where applicable;
    - Report test data in a format that includes time of day, flow meter readings, incremental flow rates, observed head levels, water depths and total flow volumes in the test pit or infiltrometer; and,
    - A description of the condition of any existing facilities being tested, noting any silt build-up, water level, connections to other structures (including distance to inverts of any interconnecting pipes), measured depths and dimensions, etc.
- Results of field and laboratory testing conducted, including the grain size analysis represented both graphically and in tabular format;
- A report on the actual and proposed design outflow rates for test pits;
- Results of the sub-level structure feasibility study and a summary of the down-gradient analysis as applicable; and,
- A geologic cross-section of the stormwater disposal area drawn to scale, with the proposed stormwater disposal facilities superimposed on the cross-section. All relevant geologic units shall be clearly identified including the target disposal layer and limiting layers.

6.3.1 Field And Laboratory Testing.

The subsurface exploration, testing, and associated engineering evaluations are necessary to identify permeable soils and to determine the thickness, extent, and variability of the soils. This information is necessary to properly design stormwater disposal facilities.

Field explorations and laboratory testing shall be conducted under the direct supervision of a geotechnical engineer, a hydrogeologist or an engineering geologist.

Test Methods

Soil infiltration rates shall be determined using one of the methods described in section 5.5 of these standards or an alternate test method approved by the City Engineer.

Minimum Requirements
The following minimum requirements, when applicable, shall be met for field explorations and laboratory testing when subsurface disposal is proposed:

- Test borings and/or test pits shall be located within the footprint of proposed stormwater disposal facilities;
- For each facility, a minimum of one subsurface exploration shall be performed for up to 1200 square feet of disposal area. Another subsurface exploration shall be performed for each additional 15,000 square feet, or fraction thereof, of disposal area. For a linear roadside swale, a minimum of one subsurface exploration shall be performed every 500 feet, staggered on both sides of the road, unless site conditions or test results indicate that additional explorations are necessary. Subsurface explorations and sampling shall be conducted according to applicable standards of the American Society for Testing and Materials (ASTM); and,

Post-Construction Testing
Newly constructed infiltration facility will require a full-scale successful test prior to project engineer certification. Contact the City Engineer for additional information.

6.3.2 Sub-Level Structure Feasibility.
If the project falls under the requirements of Section 6.2 to prepare a GSC and sub-level structure construction is being considered a sub-level structure feasibility study is required. The sub-level structure feasibility study shall include the following, at a minimum:

- A layout of the site showing lot lines and lot and block numbers; Identification by lot and block number of sites where sub-level structure construction is feasible. Provide recommendations with details of construction (i.e. maximum below grade floor elevations, minimum drainage system requirements, and any site specific recommendations);
- Discussion of the effects of hydrostatic pressure that may lead to basement flooding and recommendations as to the effectiveness of waterproofing;
- If infiltration is proposed as a method for stormwater disposal, discussion of any potential adverse impacts on proposed sub-level structures, taking into consideration the contribution of imported water (due to lawn watering, etc.); and,
- Identification of locations where sub-level structure construction is not feasible.

In-lieu of conducting a sub-level structure feasibility study, the owner may elect to prohibit sub-level structure construction throughout the entire plat. If a potential buyer would like to construct a sub-level structure, then a site specific geotechnical evaluation shall be performed by a geotechnical engineer for the individual lot prior to a building permit being issued. Language regarding sub-level structure restrictions, as provided by the City Engineer, shall be placed or referenced on the face of the plat.

Recommendations shall be summarized and provided electronically in Microsoft Excel, per the format found in Table 6-1.

Table 6-1
Example Sub-level Structure Feasibility Summary

*Refer to the Geotechnical Report for this project for further information, which may include construction details that support these recommendations.

Block 1	Lots 1-8	yes	Maximum allowable	C= 15 feet GrW=25 feet B=30 feet	Based upon the clean nature of the soils at the sub-level elevations and the depth to groundwater, footing drains are not required. However, below-grade walls shall be well reinforced to reducing cracking and thoroughly damp-proofed with a water-resistant bituminous emulsion or modified cement base coating. Backfill material shall consist of only clean granular material which is free of fine-grained soils, organic material, debris and large rocks.
Block 2	Lots 1-3	yes	4 feet	GrW=13 feet	Below-grade walls shall be well reinforced to reduce cracking and waterproofed[3] with a membrane (per IRC) which is lapped and sealed from the top of the footing to the finished grade. An under slab waterproof membrane (per IBC) which is lapped and sealed shall be integrated with the wall membrane. Backfill material shall consist of only clean granular material which is free of fine-grained soils, organic material, debris and large rocks. Walls and footings shall have a drain system with cleanouts, emptying a minimum of 15 feet in a down-slope direction away from structures. Precautions shall be taken not to excavate a closed depression over rock or clay that is intended to dispose of sump water from a foundation drain system.
Block 2	Lots 4-8	no	n/a	GrW=3 feet B=7 feet	Due to the very shallow presence of groundwater, sub-level structures are not recommended on these lots. If a crawl space is proposed, a drain system with cleanouts shall be provided that empties a minimum of 15 feet in a down-slope direction away from structures. Precautions shall be taken not to excavate a closed depression over rock or clay that is intended to dispose of sump water from foundation drain system.

1 Maximum depth measured from original pre-construction/pre-grading ground surface elevation or existing ground surface, whichever provides a greater distance between the lowest floor elevation and the limiting layer.

2 GrW=groundwater, B=bedrock or basalt, C=clayey-silty soils

3 Below grade structure waterproofing alternatives allowed by the Building and Planning Department are also acceptable.

SECTION 7
EROSION AND SEDIMENTATION CONTROL

7.1 Overall Requirements.

The objective of the erosion and sediment control standards is to minimize erosion of disturbed areas during the construction of a project. Erosion and subsequent sediment transport can have a significant impact on the water quality of receiving surface waters. Sediment loads to surface waters increase turbidity, increase water temperatures, degrade fish habitat and spawning areas, and depress dissolved oxygen concentrations. Moreover, toxic substances, trace metals and nutrients which are absorbed to soil particles can be transported into surface waters as well. The addition of these substances to surface waters degrades the existing water quality.

No runoff containing sediment shall be permitted to flow off of any construction site. Sediment shall not be discharge into storm drainage systems, waterways or wetlands. The contractor shall provide and maintain the required sediment control barriers. The control barriers shall not be removed until all roadways have been paved and a permanent and stable vegetation cover has been established.

An erosion and sediment control plan (ESCP) is required for most types of development within the City of Whitefish. The use of source control BMPs to control erosion before it starts is the preferred method of long-term sediment control. However, the best protection on active construction sites is generally obtained through simultaneous application of both source control and sediment containment BMPs. This combination of controls is effective because it prevents most erosion before it starts and has the ability to capture sediments that become suspended before the transporting flows leave the construction site.

BMPs for erosion and sediment control are selected to meet the BMP objectives based on specific site conditions, construction activities, and cost-effectiveness. Since construction site conditions are constantly changing, different BMPs may be needed at different times during construction.

In most cases permanent BMPs can be implemented most effectively when they can be integrated into other aspects of the project design. This requires that stormwater control be considered early in the design process. Stormwater detention is required for most types of development within the City of Whitefish. Some BMPs can be incorporated into stormwater detention facilities with modest design refinements and limited increases in land area and cost.

7.2 Minimum Criteria for Requiring an Erosion Control Plan.

An ESCP is required for land-disturbing activities which include, but are not limited to, excavation, planting, tilling, and grading, which disturbs the natural or improved vegetative ground cover so as to expose soil to the erosive forces of rain, stormwater runoff or wind. The following land-disturbing activities require an ESCP: (Most projects requiring building permits exceed these quantities.)

- Any activity where the total volume of material disturbed, stored, disposed of or used as fill exceeds five (5) cubic yards; or,
- Any activity where the area disturbed exceeds one thousand (1000) square feet provided it does not obstruct a watercourse, and is not located in a floodplain.
-

7.3 Erosion And Sediment Control Plan.

A professional with a good working knowledge of hydrology and ESCP practices, must prepare the ESCP. A copy of the ESCP must be located on the construction site or within reasonable access to the site. As site construction progresses, the ESC plan may require modification to reflect changes in site conditions.

In general, the ESCP will consist of a narrative and a drawing. The project designer may choose to have the narrative included on a drawing or issued as a report. The Montana Department of Transportation is a good source for erosion control details (the Montana Department of Transportation Erosion and Sediment Control Best Management Practices Manual).
The following documents are useful BMP references:

Kentucky Erosion Prevention and Sediment Control Field Guide available at **www.environment.ky.gov/**

Minnesota Urban Small Sites BMP Manual available at **www.metrocouncil.org/environment/watershed/bmp/manual.htm**.

City of Knoxville BMP Manual
www.ci.knoxville.tn.us/engineering/bmp_manual

The ESCP must accompany the road and drainage plans, grading plan, or permit request and should be integrated into the grading plan whenever possible. It must contain sufficient information to demonstrate to the City Engineer that potential problems associated with erosion, sediment, and pollution have been adequately addressed for the proposed project. The drawings and notes should be clear and concise and describe when and where each BMP is to be implemented.

The first step for selecting BMPs is to compare the project layout and schedule with onsite management measures that, where appropriate, can limit the exposure of the project site to erosion and sedimentation. Scheduling and planning considerations are the least expensive way to limit the need for erosion and sediment control measures.

At a minimum, all ESC plans must be legible, reproducible and on good quality 24" x 36" bond paper, and must contain the following information:

- Description of project, list of the locations of any existing water bodies and/or stormwater systems;
- Summary description of BMPs utilized;
- ESCP Standard Notes (see section 7.9 for suggestions); and,
- Construction Sequence.

The erosion control plans for a proposed construction site should include the following

information:

a) Location of the property development;
b) Construction schedule, including when sediment and erosion control measures will be implemented (phasing of any erosion and sedimentation control work shall be clearly indicated in the plan);
c) A site map indicating areas of total development and all areas of soil disturbance, areas of cut and fill, drainage patterns, areas used for the storage of soils or wastes, location of all erosion and sediment control measures, areas where vegetation practice are to be implemented, the location of impervious structures after construction is completed, and springs, wetlands and other surface waters;
d) Topography (with approximate slope anticipated after major grading activities);
e) Vegetation and re-seeding practices;
f) Maintenance and inspection procedures required to ensure continued effectiveness.

Best Management Practices For an ESCP. At a minimum, the following items shall be addressed in the ESCP:

1. Construction Sequence

- Install temporary ESC BMPs; constructing sediment trapping BMPs as one of the first steps prior to grading;
- Clear, grub and rough grade for roads, temporary access points and utility locations;
- Stabilize roadway approaches and temporary access points with the appropriate construction entry BMP;
- Temporarily stabilize, through re-vegetation or other appropriate BMPS, lots or groups of lots in situations where substantial cut or fill slopes are a result of the site grading;
- Protect all permanent stormwater facilities utilizing the appropriate BMPs;
- Phasing sequence for land disturbance of 30 acres or more.
- Install permanent ESC controls, when applicable; and,
- Remove temporary ESC controls when:
    - Permanent ESC controls, when applicable, have been completely installed;
    - All land-disturbing activities that have the potential to cause erosion or sedimentation problems have ceased; and,
    - Vegetation had been established in the areas noted as requiring vegetation on the accepted ESC plan on file with the City Engineer.

2. Clearing Limits

- Distinctly mark all clearing limits, both on the plans and in the field taking precaution to visibly mark separately any flood plain areas, and trees that are to be preserved prior to beginning any land-disturbing activities, including clearing and grubbing; and,
- If clearing and grubbing has occurred, there is a window of 14 days in which construction activity must begin, otherwise the cleared area must be stabilized.

3. Construction Access Route

- Limit access for construction vehicles to one route whenever possible;
- Stabilize the construction access routes to minimize the tracking of sediment onto

roadways;

- Install temporary vehicle tracking approach at site entrance locations;
- Inspect all roadways, at the end of each day, adjacent to the construction access route. If it is evident that sediment has been tracked offsite and/or beyond the roadway approach, removal and cleaning is required;
- If sediment removal is necessary prior to street washing, it shall be removed by shoveling or sweeping and transported to a controlled sediment disposal area;
- If street washing is required to clean sediment tracked offsite, once sediment has been removed, street wash wastewater shall be controlled by pumping back on-site or otherwise prevented from discharging into systems tributary to waters of the state; and,
- Locate wheel washes or tire baths, if applicable to ESCP, on site. Dispose of wastewater into a separate temporary on-site treatment facility in a location other than where a permanent stormwater facility is proposed.

4. ***Install Sediment Controls***

- Retain the duff layer, native topsoil, and natural vegetation in an undisturbed state to the maximum extent practical;
- Pass stormwater runoff from disturbed areas through a sediment pond prior to leaving a construction site or discharging to an infiltration facility;
- Keep sediment on the project site, to the maximum extent practical, in order to protect adjacent properties, water bodies, and roadways;
- Stabilize earthen structures such as dams, dikes, and diversions with either quarry spalls, seed or mulch, or a combination thereof;
- Locate sediment facilities such that they will not interfere with natural drainage channels or streams; and,
- Inspect sediment control BMPs bi-weekly at a minimum, daily during a storm event, and after any discharge from the site (stormwater or non-stormwater). The inspection frequency may be reduced to once a month if the site is stabilized and inactive.

5. ***Soil Stabilization***

- Select appropriate BMPs to protect the soil from the erosive forces of raindrop impact, flowing water and wind, taking into account the expected construction season, site conditions and estimated duration of use;
- Control fugitive dust from construction activity in accordance with state and local air quality Ordinances;
- Stabilize exposed unworked soils (including stockpiles), whether at final grade or not, within 14 days;
- Soils must be stabilized and seeded by October 15 of every year; and,
- Stabilization practices include, but are not limited to, temporary and permanent seeding, sodding, mulching, plastic covering, erosion control fabric and mats, soil application of polyacrylamide (PAM) and the early application of gravel base on areas to be paved, and dust control.

6. ***Protection of Inlets***

- Protect inlets, drywells, catch basins and other stormwater management facilities from sediment, whether or not facilities are operable, so that stormwater runoff does not enter the

conveyance system (both on and off site) without being treated or filtered to remove sediment;

- Keep roads adjacent to inlets clean; sediment and street wash water shall not be allowed to enter the conveyance system (both on and offsite) without prior treatment; and,
- Inspect inlets weekly at a minimum and daily during storm events. Inlet protection devices shall be cleaned or removed and replaced before 6 inches of sediment can accumulate.

Suggested BMPs:

- Inlet protection-products manufactured for grate inlet protection. Placing silt fence fabric or other drain fabric over an inlet grate is an unacceptable practice and will not be allowed.

7. Runoff from Construction Sites

- Protect down-gradient properties, waterways, and stormwater facilities from possible impacts due to increased flow rates, volumes, and velocities of stormwater runoff from the project site that may temporarily occur during construction;
- Runoff from the construction site through the detention/retention storage pond or swales shall be addressed in the construction sequence. No sediment laden water shall pass through the flow control system and discharge to an offsite storm conveyance systems;
- Construct stormwater control facilities (detention/retention storage pond or swales) before grading begins. These facilities shall be operational before the construction of impervious site improvements; and,
- Protect permanent infiltration facilities that are used for flow control during construction.

8. Washout Site for Concrete Trucks and Equipment

- Designate the location of a slurry pit where concrete trucks and equipment can be washed out. Slurry pits are not to be located in or upstream of a swale, drainage area, stormwater facility or water body, or in an area where a stormwater facility is existing or proposed.

9. Material Storage/Stockpile

- Identify locations for storage/stockpile areas, within the proposed ESCP boundaries, for any soil, earthen and landscape material that is used or will be used on-site;
- Stockpile materials (such as topsoil) on-site, keeping off roadway and sidewalks; and,
- Maintain on-site, as feasible, items such as gravel and a roll of plastic, for emergency soil stabilization during a heavy rain event, or for emergency berm construction.

10. Cut and Fill Slopes

- Consider soil type and its erosive properties;
- Divert any off-site stormwater run-on or groundwater away from slopes and disturbed areas with interceptor dikes, pipes or temporary swales. Off- site stormwater shall be managed separately from stormwater generated on-site;
- Reduce slope runoff velocities by reducing the continuous length of slope with terracing and diversion, and roughening the slope surface;
- Place check dams at regular intervals within ditches and trenches that are cut into a slope; and,
- Stabilize soils on slopes, where appropriate.

11. Stabilization of Temporary Conveyance Channels and Outlets

- Stabilize outlets of all conveyance systems adequately to prevent erosion of outlets, adjacent streambanks, slopes and downstream reaches.

12. Control of Pollutants Other Than Sediment on Construction Sites

- Control on-site pollutants, such as waste materials and demolition debris, in a way that does not cause contamination of stormwater or groundwater. Woody debris may be chopped or mulched and spread on-site;
- Cover, contain and protect all chemicals, liquid products, petroleum products, and non-inert wastes present on-site from vandalism use secondary containment for on-site fueling tanks;
- Conduct maintenance and repair of heavy equipment and vehicles involving oil changes, hydraulic system repairs, solvent and de-greasing operations, fuel tank drain down and removal, and other activities that may result in discharge or spillage of pollutants to the ground or into stormwater runoff using spill prevention measures, such as drip pans. Clean all contaminated surfaces immediately following any discharge or spill incident. If raining, perform on-site emergency repairs on vehicles or equipment using temporary plastic over and beneath the vehicle; and,
- Locate pH-modifying sources, such as bulk cement, cement kiln dust, fly ash, new concrete washing and curing waters, waste streams generated from concrete grinding and cutting, exposed aggregate processes, and concrete pumping and mixer washout waters, downstream and away from any stormwater facilities or location of proposed stormwater facilities.

13. Permanent BMPs

- Include permanent BMPs, if necessary, in the ESCP to ensure the successful transition from temporary BMPs to permanent BMPs; and,
- Restore and rehabilitate temporary BMPs that are proposed to remain in place after construction as permanent BMPs.

14. Maintenance of BMPs

- Inspect on a regular basis (at a minimum bi-weekly, and daily during/after a runoff producing storm event) and maintain all ESC BMPs to ensure successful performance of the BMPs. Conduct maintenance and repair in accordance with individual ESC BMPs outlined in this section; and,
- Remove temporary ESC BMPs within 30 days after they are no longer needed. Permanently stabilize areas that are disturbed during the removal process.

7.4 Stormwater Pollution Prevention Plan (SWPPP).

Construction site disturbing greater than or equal to an acre in the in the City are generally required to follow two sets of guidelines. The guidelines are from the Montana Department of Environmental Quality (MDEQ) and the City of Whitefish. In order for a construction project to begin follow the steps below regarding stormwater permits and requirements.

MDEQ Requirements for the General Permit for Stormwater Discharges Associated with Construction Activity:

1. Develop a Stormwater Pollution Prevention Plan (SWPPP)

- The SWPPP is a document that is developed to direct and assist operators in identifying sources of potential pollutants at the construction activity site and Best Management Practices (BMPs) to be used to help ensure pollutants do not impact receiving surface water through stormwater runoff.
- The SWPPP must contain a narrative description of the project and a drawing of the site with proposed improvements and BMPs.
- The plan is to be kept on site and available for inspection by MDEQ and the City of Whitefish.

2. Review and submit a Notice of Intent (NOI)
   - To obtain the forms necessary to complete the NOI refer to the MPDES General Permit for Stormwater Discharges Associated with Construction Activity, which can be downloaded from www.deq.state.mt.us.
3. Post a copy of the complete NOI and SWPPP at the construction site until completion of construction activity.
4. Implement SWPPP prior to beginning land disturbance activity.
5. Inspect and maintain BMPs outlined in Permit MTR100000
6. At the completion of the project submit a Notice of Termination (NOT) following permit requirements.

7.5 Maintenance Responsibility.

The owner or owner agent is responsible to ensure that BMPs are used, maintained, and repaired so that the performance standards continue to be met. After all land-disturbing activity is complete and the site has been permanently stabilized, maintenance and the prevention of erosion and sedimentation is the responsibility of the property owner.

Inspection and maintenance are the key elements in controlling erosion and sediment. Erosion and sediment control devices are installed as necessary and moved around the project site. Inspection should be performed after each rainfall and at least weekly. Maintenance must be performed immediately whenever deficiencies are noted. Checklists can help to document the inspection and maintenance process.

All projects require a pre-construction meeting with the city inspector prior to commencing clearing and grading. The city inspector will visit the project periodically and will also be involved in the final inspection checklists and approval.

7.6 Inpections And Records.

An example erosion and sediment control inspection form is included in Appendix 7B. Flexibility it key. Be ready to modify the plan as needed throughout the construction phases.

Site Inspections

- A site inspection is required every 14 days and after major storm events to ensure all BMPs have been constructed and are functioning properly.
- All inspections shall be documented in written form, kept on the project site, and made available for review by the City.

7.7 Enforcement And Appeals Process.

If any violation is found, a notice will be issued to the Responsible Party. The notice will state the nature of the alleged violation(s), the action required to fix the violation(s), and a time limit to fix the violation(s). The City has the authority to issue a stop work order, clean the public way and bill the owner directly for the actual cost of cleanup plus an administrative fee, and issuing a civil citation. Any person, firm, or corporation violating any of the provisions or terms may be subject to penalties as a municipal infraction pursuant of Section 1-4-1 of the Whitefish City Code. Each day of continued violation shall constitute a separate, additional offence.

7.8 Typical Checklist for Preparing Erosion and Sediment Control Plan.

A typical checklist for preparing an erosion and sediment control plan is included in Appendix 7A at the end of this section.

7.9 Typical General Notes for Erosion and Sediment Control Plans.

The following list contains general notes for a typical small project:

1. As a minimum, all erosion and sediment control practices will be constructed and maintained according to these standards and the Montana Department of Transportation Erosion and Sediment Control Best Management Practices Manual. Detailed examples and descriptions of these BMPs are included in the MDT manual.

2. A copy of the approved erosion and sediment control plan shall be maintained at the project site at all times. This copy shall be made available to the City of Whitefish Public Works Department upon request.

3. Prior to commencing land-disturbing activities in any area not on the approved erosion and sediment control plan, the contractor shall submit a supplementary erosion control plan to the City of Whitefish Public Works Department for review and approval.

4. All erosion and sediment control measures are to be placed prior to or as the first step in clearing and grading. The contractor is responsible for any additional erosion control measures necessary to prevent erosion and sedimentation as determined by the City of Whitefish Public Works Department.

5. The City of Whitefish Public Works Department must be notified prior to dewatering operations. Water must be pumped through an approved filtering device. The City of Whitefish may suspend dewatering operations if pollution is observed.

6. The contractor shall inspect all erosion and sediment control devices at least once a week and at least once a day during rainfall events. The contractor shall perform any repairs or maintenance immediately in order to ensure effective erosion and sediment control.

7. The contractor shall maintain a record of all inspections and maintenance activities at the project site. This record shall be made available to the City of Whitefish Public Works Department upon request.

8. Unless confined in a pre-defined, bermed containment area, the cleaning of cement truck delivery chutes is prohibited at the job site. The discharge of water containing waste cement to the storm sewer is prohibited.

9. All disturbed, exposed, unworked soil areas must be stabilized within 14 days.

10. BMPs shall be left in place and maintained by the contractor until adequate vegetation has been established to protect the areas from erosion.

Typical Checklist for Preparing Erosion and Sediment Control Plan, Sheet 1

Project: _____

Reviewer: _____

Date: _____

Narrative

_____ Basic report format – Site name and address, author of report, legibility, page numbers, correct spelling.

_____ Project description – Purpose of grading or construction activity, total area to be disturbed.

_____ Existing site conditions – Describe vegetation, drainage patterns, topography.

_____ Proposed site conditions – Types of ground cover, drainage patterns, site grading.

_____ Adjacent property and uses.

_____ Types of soils – Soil names and descriptions, erodibility, permeability, depth, texture, shrink/swell potential, hydrologic soil group.

_____ Critical or sensitive areas – Steep slopes, streams, wetlands, sinkholes, etc.

_____ Construction scheduling – Duration of clearing, open grading, installation of permanent stormwater controls.

_____ Inspection and maintenance schedule for BMPs and erosion control devices.

_____ Supporting calculations for BMPs and erosion control devices. In general, detention basins and stormwater conveyance systems will have separate calculations.

Typical Checklist for Preparing Erosion and Sediment Control Plan, Sheet 2

Project: _____

Reviewer: _____

Date: _____

Site Plan

_____ Basic drawing format – North arrow, scale, engineer stamp, site name and address, legibility, drawing legend, typical abbreviations.

_____ Vicinity map – A small map showing the surrounding area, including landmarks, streams, and roads.

_____ Existing vegetation and trees.

_____ Limits of clearing and grading.

_____ Existing and proposed contours – Appropriate interval, contours match together.

_____ Site development – Show all buildings, roads, parking lots, and other structures.

_____ Construction access routes, borrow areas, spoil areas.

_____ Existing and proposed drainage structures – Sizes, materials, slopes, other important dimensions.

_____ Drainage patterns and watershed boundaries – Indicate drainage area for each watershed.

_____ Property boundaries and easements.

_____ Location of critical or sensitive areas.

_____ Location of BMPs and erosion control devices – Typical placement as construction work progresses.

_____ Details for BMPs and erosion control devices.

APPENDIX 7B

EROSION AND SEDIMENT CONTROL INSPECTION FORM

Inspector: _____ Inspection Date: _____

Company: _____ Project #: _____

Prime Contractor: _____ Project Name: _____

University Project Manager: _____

Reason for Inspection: Weekly Rain Other _____ (circle one) Weather: _____

Areas to be Inspected

Inspect all individual locations of a control practice type before checking boxes

_____ **% Estimated percentage of project area devoid of cover**

☐ **No area devoid of cover has been left inactive for more than 7 days without stabilization**

☐ **There is no visible sign of sediment leaving the construction site** (Street / Storm Sewer / Overland)

* Modifications are required if control practices are not prohibiting sediment from leaving the site
* Maintenance is required when a best management practice is nearing it's useful life
* Manholes and downstream lines (creeks if required by MPCA/DNR) will be cleaned, not flushed, if inlet protection fails

Best Management Practices	Control Practice Effective			Maintenance / Modification Required			Best Management Practices	Control Practice Effective			Maintenance / Modification Required		
	Y	N	N/A	Y	N	N/A		Y	N	N/A	Y	N	N/A
Silt Fencing							Stock Pile Stabilization						
Ditch Checks							Mulch						
Riprap							Erosion Mat						
Inlet Protection							Temporary Seeding						
Drainage Swales							Permanent Seeding						
Construction Site Exits							Sod						
Project Schedule							Other _____						
Grading Practices							Other _____						

Inspection Comments / Recommendations

Any Control Practice Effective box checked "NO" must have comments and recommendations

Any Maintenance / Modification Required box checked "YES" must have comments and recommendations

Individual Control Item	Comments / Recommendations	Date Completed

General recommendations to increase the effectiveness of erosion and / or sediment control program

☐ **See back of sheet for additional comments and recommendations**

Communication Notes

To Whom	Type of Communication (circle one)						Comments
_____	Direct	Email	Phone	Fax	Written	Diary	
_____	Direct	Email	Phone	Fax	Written	Diary	

☐ Copied to Project Manager - Facilities Management, 241 DAdB 1049 University Drive, Duluth MN, 55812

___-___-____-680.__

SECTION 8
STREETS

8.1 Roadways and Walkways.

Roadway systems shall be designed, constructed, and tested in accordance with the current editions of the Engineering Standards for the City of Whitefish, Montana, the Montana Public Works Standard Specifications and The Subdivision Regulations of the City of Whitefish. All roads within a proposed subdivision shall be designed by a licensed professional engineer and approved by the City Engineer and upon completion of construction shall be certified by a licensed professional engineer that they are in compliance with these standards.

Traffic Analysis. Developments which can contribute two hundred (200) or more vehicle trips per day to the City Street System shall have a Traffic Analysis submitted by a professional engineer. Such analysis shall indicate the expected increase in traffic movement on existing roadways serving the development, and shall determine existing traffic conditions on roadways to be impacted by the development.

Cul-De-Sacs. Dead-end streets are strongly discouraged and all dead-end streets must terminate in an approved cul-de-sac. Cul-de-sacs are only allowed in extraordinary circumstances when the City's transportation plan shows no opportunity for future connection. Where a future street extension is proposed, a temporary cul-de-sac of adequate size as approved by the Fire Chief and City Engineer shall be provided. Roadways that terminate at a cul-de-sac shall have a maximum length of one thousand (1000) feet. The paved turnaround radius shall be a minimum of fifty (50) feet. If the development along this roadway consists of buildings three stories or higher, the minimum turn around radius of the cul-de-sac shall be sixty (60) feet to accommodate the need for a Whitefish Fire Department ladder truck unless approved by the Fire Department. A landscaped area is acceptable in the center of the cul-de-sac. The maximum allowed slope across a cul-de-sac shall be 5%.

Horizontal Alignment. Horizontal alignment of streets must ensure adequate sight distances. When street center lines deflect more than five (5) degrees, construction shall be made by horizontal curves.

Signage and Striping Plan Requirements. The Developer shall provide and install the necessary Traffic Control in accordance with the latest edition of Manual on Uniform Traffic Control Devices. Plans shall show locations of all signs, light poles, trees, etc. Street name signs shall be installed at each intersection. All street name signs are to meet City requirements. (See Standard Details 16-18).

Traffic Signals and Widening of U.S. 93. A copy of the Traffic Analysis submitted to the City may be forwarded to the Montana Department of Transportation for their review and recommendations. The Montana Department of Transportation's recommendations for traffic signals and widening along U.S. 93 for acceleration/deceleration lanes will become a City

requirement. When widening is necessary or traffic signals or electronic warning devices are required, on-site or off-site, it shall be the Developer's responsibility, at the Developer's expense, to install such signals or devices.

Walkways. All developments shall have delineated walkways which will allow pedestrians to safely travel from any part of the development to the boundaries of the development. Developments abutting existing or proposed roadways will be required to have walkways within the public right-of-way parallel with the roadways. The minimum width of a walkway shall be five (5) feet. Unless approved by the City Engineer sidewalks are required on both sides of the street in all residential and commercial subdivisions, residential sidewalks shall be separated from the street by a boulevard or open space with a minimum width of six feet (eight feet is the preferred width for boulevard tree planting). ADA compliant handicap ramps shall be installed at pedestrian crossings, see SD-14.

Recycled Material in Pavement Mix. The Public Works Department may allow the use of crushed, recycled glass in pavement mix if the design engineer can show that the section's strength and density is equivalent to the standard asphalt section. Asphalt specifications and density requirements are listed in the Montana Public Works Standard Specifications Section 02510.

TABLE 8 -1

ROAD DESIGN STANDARDS FOR LOCAL SUBDIVISION STREETS

DESIGN STANDARDS	ARTERIAL	COLLECTOR	LOCAL	LID/ RURAL[1]	PRIVATE LOCAL
Minimum Right-of-Way[2]	80 ft.	60 ft.	60 ft.	60 ft.	50 ft.
Minimum Asphalt Width	[3]	[3]	24 ft.[4]	20 ft.[5]	20 ft.
Maximum Grade	6%	8%	9%	9%	9%
Cul-de-sac turn around:					
a. Outside Asphalt Radius			50 ft.	50 ft.	50 ft.
b. Minimum Outside Right-of-Way Radius[6]			60 ft.	60 ft.	55 ft.
c. Length			See Table 2		

[1] Average net residential density of 1 acre or less. Low Impact Design requires approval by the City Engineer.
[2] Terrain and design constraints may dictate greater right-of-way.
[3] Design approved by the City Engineer.
[4] Where parking is required on both sides of street, 34 feet minimum roadway width is needed.
Note: Where density exceeds 8 units/net acre, parking is required on both sides of street unless overflow/visitor parking demands are met elsewhere.
[5] No parking allowed on 20 feet rural street.
[6] Right-of-way radius is intended to accommodate sidewalk & boulevard requirements.

TABLE 8 - 2

MINOR STREET STANDARDS

Loop and Cul-de-sac Street Standards

Length[1]	Units	R/W	Travel Surface
0-300'	1 - 3	50' [2]	20
0-300'	4 - 10	50' [2]	24
0-300'	10 +	60'	24
301-1000'	1 - 3	50' [2]	20
301-1000'	4 +	60'	24

[1] Length of cul-de-sac shall be measured from the edge of the right-of-way of the intersecting street to the furthest edge of the right-of-way of the turn around.
[2] No further development potential for area served (verified by plat restriction).

Street Intersections. Street intersections shall meet the following requirements:

- Streets shall intersect at 90° angles, except where topography precludes and in no case shall the angle of intersection be less than 75° for a minimum distance of 60 feet as measured along the centerline.
- Two streets meeting a third street from opposite sides shall meet the same point, or their centerlines shall be offset at least 125 feet for local roads and 300 feet for arterials or collectors.
- No more than two streets may intersect at one point.
- Intersections of local streets with major arterials shall be kept to a minimum.
- Hilltop intersections are only permitted if reasonable alternatives exist do not exist. Intersections on local streets within 100 feet of a hilltop are prohibited. Intersections on arterial or collector streets within 200 feet of a hilltop are prohibited.
- Maximum grade of approach to any intersection shall not exceed five percent for a distance of 60 feet as measured from edge of travel ways to provide for adequate starting, stopping and stacking distances.
- Names of new streets aligned with existing streets shall be the same as those of existing streets. Proposed street names shall not duplicate or cause confusion with existing street names and shall be approved by the City Clerk.
- Location of collector and arterial streets shall comply with the Whitefish City-County Master Plan or any other major street and highway plan adopted by the Board of County Commissioners and/or the City of Whitefish.

8.2 Chip Sealing.

All new roads shall be chip sealed in accordance with the most recent version of the Montana Public Works Standard Specifications. Chip sealing must be completed during the projects 2-year warranty period. The Subdivision Improvement Agreement must include the cost of chip sealing the newly constructed streets.

8.3 Driveways.

Driveways onto arterial streets shall be discouraged. Driveways onto collector streets shall be separated by at least forty (40) feet and be at least (80) feet from the edge of pavement an intersecting street unless approved by the Public Works Director. The nearest edge of any driveway on all other streets shall be not less than thirty-five (35) feet to the edge of the pavement of the nearest intersecting street. The maximum slope for driveways is 9%.

The following standards must be followed in design of residential driveways:

- Paved hard surface driveways are required except as provided for in the zoning regulations. Driveways are limited to a maximum width of 22-feet except as provided below.
- Primary lots with less than 75 feet of road (street) frontage shall have only one access (driveway) not to exceed 22 feet in width within the right-of-way. Sublots with less than 40 feet frontage shall be limited to one driveway per lot not to exceed 11 feet in width. (Shared driveways for sublots are preferred with widths not exceeding 22 feet.)
- Driveways for adjoining lots in cul-de-sacs shall be shared when the lots have less than 50 feet of frontage. Shared approaches when required shall be designated on the subdivision plat.
- Driveways shall be a minimum of 35 feet from the edge of pavement of any local street intersection.
- Driveway limitations shall appear on the plat.
- In no case shall residential driveway widths exceed 33% of the lot width within any public right-of-way.
- Permits from the Public Works Department are required for all driveway construction (refer to standard approach detail SD15).

8.4 Utilities and Easements.

Easements for public utilities which cross private property shall be delineated and dedicated on the final plat. Water, sewer and storm sewer easements shall be twenty (20) feet wide for a single pipeline with the pipe centerline five (5) feet from one easement edge. With two pipelines, the minimum width shall be twenty-five (25) feet with each pipe centerline five (5) feet from the easement edge. Easements for all other utilities, not adjacent to right-of-ways, shall be twenty (20) feet wide unless specified otherwise by the utility company.

It shall be the responsibility of the Developer to construct all roadways and utilities from the existing facilities to the far property line of the development or such point within the development that may be specified by the City Engineer. All utilities shall be within a public right-of-way or easement to permit free and unobstructed access.

It is the Developer's responsibility to obtain and provide the City with all easements and right-of-ways necessary to extend roadways and utilities to the far property line of the development. The Developer shall obtain written approval from the Whitefish Public Works Department stating they have reviewed and approved the location of easements for the future extension of roadways and utilities which shall be submitted with the final plat. The written approval shall be submitted along with an 11" by 17" legible copy of the approved final plat showing the utility and/or easement locations. The easement language on the final plat shall state that no landscaping (other than lawn), buildings, or other obstruction is allowed within street and utility easements.

Only water, sanitary sewer, storm sewers and street lighting elements may be placed within the street right-of-way. No underground utilities, except service sweeps from the utility trench to utility boxes, pedestals, vaults or transformers shall be place in the boulevard between the back of curb and sidewalk or within a sidewalk itself. No utility boxes, pedestals, vaults or transformers shall be placed within the boulevard, the radial extension of an easement, proposed roadway, access way to any City facility, or within 10-feet of fire hydrants or curb boxes unless approved by the Public Works Department.

There shall be reserved along the front lot line and side street lot line of each residential lot a ten foot (10') wide utility easement along, contiguous and adjacent to the lot line to provide an area between the sidewalk and easement line for the placement of privately owner underground utilities, including power, phone, gas, cable, etc. No private utilities shall be located in water or sewer trenches. Utilities must maintain a minimum of 5' of undisturbed soil between water or sewer utility trenches. If approval is obtained in advance from both the appropriate utility companies and the public works director, electric, phone and cable facilities may be placed under the sidewalk. In this case a five foot wide utility easement would be required along the front lot line for the installation of natural gas lines.

Utility lines shall be designed by a licensed professional engineer or by the utility firms in cooperation with the subdivider. All applicable laws, rules and regulations of appropriate regulatory authority having jurisdiction over such facilities shall be observed. Location of all proposed utilities must be shown on the construction plans that are reviewed and approved by the Public Works Department.

If TV, telephone or natural gas is not installed at the time of development, provisions shall be made for installation at a later date without the cutting of paved roadways.

8.5 Bicycle/Pedestrian Paths.

Bicycle paths that are part of the City's Bicycle Master Plan shall be a minimum of 10-feet with a cross slope of 2% and a 1-foot wide gravel border along each edge. This minimum width shall be reduced to 8-feet when constructed through critical areas. The minimum width may also be reduced to 8-feet with approval of the Public Works and Planning and Building Department Directors. The path bed shall be excavated to a minimum depth of 11.5 inches. The path bed shall consist of a minimum 9 inches of crushed gravel compacted to 95% of maximum density as determined by AASHTO T99, unless otherwise dictated by sub-soil type materials being compacted to road standard. The overlay shall consist of 2.5 inches of asphalt compacted to 93% of maximum density, as determined by ASTM D-2041. Construction seal shall be applied at 0.08 gallons/square yard after installation.

Concrete paths shall have a base that consists of a minimum of 3 inches of crushed gravel compacted to 95% of maximum density as determined by AASHTO T-99. Concrete shall be a minimum of 6 inches of M4000 reinforced with 1.5 lbs. per cubic yard of Fiber mesh. Where terrain allows, slope of the path should not exceed 12:1. Bike path construction should be in accordance with Standard Detail 48. Alternative materials, such as; porous pavement, pavers or porous concrete, may be substituted for asphalt or concrete upon approval by the Public Works Director.

8.6 Parking.

Parking spaces shall be a minimum of 20 feet from crosswalks and a minimum of 8 feet from adjacent driveways. It is recommended that stabilization fabric be installed under the parking lot asphalt/gravel base section (MIFAFI 600X, AMOCO CEF 2004 or approved equal).

8.7 Alleys.

Public owned and maintained alleys shall not be designed as the primary access for lots and shall be paved to a width of no less than 10 feet or no more than 16 feet. A minimum of 5 feet of right-of-way shall be provided for snow storage between the edge of pavement and property lines. Alley approaches for parking or garages shall be limited to no more than 50% of the lot frontage and shall be at least 2 feet from an adjoining property line. No plantings (trees or shrubs) or structures shall be located in the alley right-of-way within 5 feet of the edge of pavement.

8.8 Mail Boxes.

Where the United States Postal Service (USPS) requires group mail box pull outs on public streets, it shall be the responsibility of the property owners to maintain access as required or requested by the USPS. Individual mail boxes located in the public right-of-way are the maintenance responsibility of the property owner, no permanent structures are allowed. No individual mail boxes shall be allowed on collector streets where the pavement width is less than 32 feet.

8.9 Traffic Impact Studies.

Development generating 200 or more Average Daily Trips (ADT) to the City Street System shall complete a Traffic Impact Study (TIS), developed by a Professional Engineer. If a project is going to be reviewed through the public hearing process, (i.e., subdivision, planned unit development, conditional use permit) it shall be part of a complete application submittal to the Planning Department. If a project is simply applying for a building permit, the TIS shall be reviewed and approved by the Public Works Department prior to the issuance of a building permit.

Prior to submitting a TIS, the applicant and/or engineer shall have a scoping meeting with Public Works. Sufficient detail should be provided so the reviewer is able to follow the path and methodology of the study. Assumptions should be documented and published sources referenced, as necessary. The TIS must be stamped by a Professional Engineer. At a minimum all the items described below shall be included and any other items identified through the scoping process.

- Narrative (description of the project, phasing plan)
- Site Plan (showing proposed access points, nearby intersections, neighboring access points/driveways)
- Study Area (as identified through the scoping process)
- Vicinity Map
- Existing Conditions (roadway classification and design, sidewalks, bike lanes, trails, other approved projects nearby with associated trip generation, crash analysis, capacity analysis, intersection Level of Service, transportation improvements)
- Development Traffic (number of trips generated using the latest edition of the *ITE Trip Generation Manual*, distribution of trips)
- Impact on City Transportation Network (analysis of impacts on roadways and intersections)
- Access Management
- Traffic Calming (if needed, to deter cut through traffic and reduce speeds)
- Mitigation Measures

8.10 Boulevard Landscaping.

A minimum of 4" of topsoil is required within the boulevard. The finished surface of topsoil shall provide adequate drainage from the top of the sidewalk to the top of the curb. Areas of topsoil that settle during the warranty period shall be refinished. Topsoil shall be fertile, natural loam surface soil, free of clay, weeds, roots or stones larger than one inch in any dimension. The boulevard shall either be sodded or seeded in accordance with the MPWSS. The Contractor is responsible during the warranty period to maintain the seed or sod until it is well established. The minimum allowed boulevard width is six (6) feet. Noxious weed control of boulevard areas is required for new developments.

8.11 Traffic Calming.

This section provides some guidelines to help incorporate traffic calming principles into a new development. There are no traffic calming requirements provided. Instead guidance is provided for integrating traffic calming into a project. Traffic calming refers to a number of methods used to reduce vehicle speeds, improve safety, and enhance the quality of life. In the simplest definition, it is changing the physical environment to reduce the negative effects of motor vehicle use, alter driver behavior and improve conditions for pedestrians and other non-motorized street users. Recognizing the role that traffic calming may be able to play in addressing neighborhood and regional traffic concerns.

Traffic calming techniques cannot be used with the same degree of success on all roadway facilities. Traffic calming is rarely seen on roadway facilities higher than a collector roadway functional classification. This is primarily due to roadways functionally classified higher than a collector having the primary purpose of moving traffic, whereas for collector and local roadways the primary purpose tends to shift more towards serving adjacent land uses and infiltration into neighborhoods. In some circumstances, traffic calming can be applied to a minor arterial roadway with low traffic volumes.

Traffic calming is comprised of the three "E's," Education, Enforcement and Engineering. The Institute of Transportation Engineers (ITE) defines traffic calming as a "combination of mainly physical measures that reduce the negative effects of motor vehicle use, alter driver behavior, and improve conditions for non-motorized street users." It is used on local streets to discourage non-local traffic. Non-local traffic is not invested in the neighborhood, and therefore has less respect for speed limits, and the non-vehicular elements of the street environment. Certain, limited traffic calming measures are appropriate for slowing traffic on collectors or minor arterials as well.

Because traffic calming includes an educational or enforcement campaign, or an engineering study, it can result in the physical construction of traffic elements designed to reinforce the perceived need for caution by the users of the transportation system. The need for physical traffic calming devices indicates the transportation user's consistent failure to appropriately interact with the surroundings. Regardless of any traffic calming measures installed, the primary responsibility for safe use of the streets lies with the individual driver, cyclist, or pedestrian.

The success of traffic calming measures on a local street depends upon strong support by residents in the immediate area. Additionally, the traffic calming measures need to address situations that a number of residents agree should be addressed. Situations that many people agree exist and that could respond to traffic calming techniques will have more support from the neighborhood, and will better enhance the neighborhood environment. Traffic calming projects which involve installing "hard" improvements should meet several criteria before being considered for implementation, because they can be disruptive to the residents in the surrounding area, difficult to fund and maintain, and difficult to remove once installed.

Traffic calming is a series of techniques designed to lower vehicle speeds, reduce the amount of cut-through or non-local traffic, and in certain cases, decrease truck traffic. The goal of these techniques is to keep traffic on a local street local. Other goals which traffic calming can achieve include the following:

- Reduce air and noise pollution caused by vehicles;
- Reduce the frequency and severity of accidents;
- Improve the street environment through increased landscaping;
- Improve the quality of life for residents;
- Promote walking and bicycling;
- Reduce the need for police enforcement;
- Address speeding or other problems on collectors or minor arterials; and
- Improve pedestrian safety.

Traffic calming elements can be incorporated into the initial design of subdivision, or can be retrofitted into existing subdivisions. The City of Whitefish has many streets which already contain Traffic calming measures. These include on-street parking, and sidewalks separated from the street by a planting strip. Other techniques can include landscaped medians, pedestrian bulb-outs at corners, traffic circles or other intersection design techniques as well as other mid-block design techniques.

Very few traffic calming techniques are appropriate for use on arterials, because they interfere with an arterial's ability to move people and vehicles quickly from one place to another.

Types of Traffic Calming Measures. A table of traffic calming measures is included in Appendix N. Traffic calming measures generally fit into one of the following six categories:

1. Passive measures
2. Education and enforcement
3. Signing and pavement marking
4. Vertical deflection
5. Horizontal deflection
6. Obstruction

1. Passive Measures. Passive measures are described as measures which are built into the street environment. They are not immediately obvious to the traveling public, but nevertheless produce a calming effect on traffic. Some of these measures are listed below.

- Tree-lined streets;
- Streets with boulevards separating the sidewalks;
- Streets with raised center medians (usually landscaped);
- On-street parking (including angled parking);
- Highly visible pedestrian crossings; and
- Short building set-back distances.

These elements tend to slow traffic by giving motorists the impression that the street is narrow and that extra care is required, but these elements do not restrict or interfere with

traffic flow. A combination of more than one of these techniques, or these techniques combined with measures from the other categories, will produce better results.

2. Education and Enforcement. Several techniques are available to raise public awareness of traffic problems and change the behaviors contributing to problems. Some of these techniques are listed below.

- Neighborhood Speed Watch Program - A speed monitoring program where residents themselves measure vehicle speeds with a radar unit and record license plate numbers of speeding vehicles. Follow-up action of the data can include sending letters to the registered owners of the vehicles explaining the safety concerns within the neighborhood and requesting better observance of the speed limits.

- Radar Speed Monitoring Trailer - A pull-behind trailer equipped with speed detection equipment, a readout of vehicle speeds, and a sign with the posted speed limit is brought to an area with speeding problems. These trailers are usually unmanned; however better results are obtained if someone is present. Additionally, the trailer can be equipped with a camera that would record license plate information for possible follow-up.

- Neighborhood Traffic Safety Campaign - As a part of the normal neighborhood group activities, newsletters or other materials can be produced containing educational information regarding traffic issues. These materials can be tailored to issues of specific concern to different neighborhoods. These issues can then be addressed at regularly scheduled meetings or at special meetings and recommendations can be put forward to increase neighborhood traffic safety.

- Target Enforcement - This is a requested, time-limited addition of police enforcement within a neighborhood.

- Public Service Announcements (PSA's) - Video public service announcements on traffic issues, mainly related to safety, can be produced. These can include traffic calming information, and should be televised during local news programs, to inform the public on traffic issues and calming techniques identified in this technical memorandum.

3. Signage and Pavement Marking. Traffic control signs and pavement markings can be installed as non-intrusive traffic calming measures. These techniques are already in use in the Whitefish area. The signs can include speed limit signs, dead-end street signs, and signs indicating school crossings or general pedestrian crossing. Pavement markings can include marked crosswalks, delineation of (narrow) lanes, and speed limit markings. Traffic calming techniques which specifically fall in this category include:

- Truck Route Signing – Signs placed on routes where trucks are allowed, plus signs placed on routes where trucks are not allowed.
- Basket Weave Stop Sign Pattern – Stop signs placed at every intersection in a residential neighborhood with stops alternating between east west and north south. Note: this is appropriate for local access streets only, and it disregards MUTCD warrants.
- Additional speed limit signs.
- Edge Lines – Painted lines on the pavement which narrow traffic lanes and/or provide for bicycle lanes or on-street parking.
- Stop Bars – painted lines on the pavement that show motorists where to stop for stop signs.

4. Vertical Deflection, Horizontal Deflection, and Obstruction. There is a wide variety of physical traffic calming measures which fall under the categories of vertical deflection, horizontal deflection and installation of obstructions. Each measure has both advantages and disadvantages. A comprehensive description of a wide variety of these measures is presented on the tables at the end of this technical memorandum. These tables include a general cost for basic installation of each measure. Actual costs may increase, depending upon such additions as irrigation systems, street lighting, landscaping, installation of decorative brick pavers, etc. Acquisition of additional right-of-way can also raise the cost, sometimes dramatically so.

Several guidelines should be considered when deciding to implement these types of deflection and obstruction measures. These include:

- Attempt less restrictive measures before considering more restrictive measures such as road closures or other route modifications.
- Space devices 300-to-500 feet apart in order to contain speeds to a 20-to-25 mile-per-hour speed range.
- Make accommodations for drainage and snow removal.
- Make accommodations for emergency vehicles.
- Consider pedestrian and bicyclist needs.
- Address landscaping or other maintenance issues.

SECTION 9
STREET LIGHTING

9.1 Street Lighting.

Decorative street lighting is required on all public and private streets. Any variation from this requirement must have approval of the Public Works Director. Street lights shall be installed concurrently with underground utilities. Street lighting will be decorative in character, unless otherwise approved by the City Council. Decorative lights shall include Hadco model CP2316-14-J poles (green in color), or an approved equal, and Hadco model C2316-50-HPS-J-240V luminaries (with an acrylic globe and full top with house side reflector), or an approved equal, with other features such as photo control, wattage, lighting layout and electrical design to be approved by the Public Works Director. All decorative street lights must be compliant with the City's outdoor lighting standards (section 11-3-25 of the Whitefish City Code). Lighting Standard Details 47a thru 47h must be included for lighting plans to be in compliance with the Whitefish Engineering Standards.

The following specifications are to be used when installing street lighting systems:

9.2 Conduits and Ground Boxes.

1) All conduit work completed by General Contractors is to be inspected by the licensed electrical contractor prior to burial.

2) Minimum size conduit to be used is 1 ¼" Schedule 40 PVC buried at a depth of not less than 18". Conduit runs from power source to service assembly shall be 3-inch schedule 40 PVC conduit.

3) Conduit shall follow behind curb on boulevard side where practical. Conduit shall be placed no more than 6" from curb.

4) Conduit where entering and exiting light bases and ground boxes shall be sealed from dirt, debris and rodents (dux seal, perma seal, etc.).

5) Ground boxes shall be of concrete material, Type I or II, and installed flush with finished grade, or no more than 1" below finished grade. Ground boxes shall not be installed higher than finished grade. Ground boxes shall be arranged to drain (gravel bottom etc.).

9.3 Wiring Methods.

1) Wire installed in conduit runs shall not be smaller than #8 THHN copper stranded conductor.

2) Wire installed in poles from base to luminaire shall be #10 THHN copper stranded conductor.

3) Color code for wiring shall be consistent throughout installation.

4) Ground box splices shall be made water tight.

9.4 Pole Installation and Wiring.

1) Poles shall be installed plumb and level.

2) Anchoring bolts and nuts shall be corrosion resistant and installed with an anti sieze compound on threads.

3) After installation, pole bases shall be grouted solid to concrete standard.

4) Poles shall be left clean and touchup paint should be applied as needed. Paint numbers are as follows:

   a. Western Building, BEHR #8830, hunter green
   b. Hadco 9589458
   c. Sherwin Williams 5160-9589458

5) Each luminaire shall have 2 water tight break away fuse holders with dual element 3 Amp midget fuses. Homac fuse holder #SLK-MD, or equal with Bussman fuse #FNM-3 or equal.

6) Fuse holder shall be installed at base of pole with a minimum of 12" free conductor (for future maintenance and in case of pole damage).

7) Lamp shall be G.E. #LU50/D/MED (or equal).

9.5 Spacing of Lights on Residential Streets.

Decorative lights shall be spaced every 150 to 180 feet along residential streets. If necessary the spacing may extend in some areas to 200 feet. The light location should alternate from side to side of the street. Lights shall be placed a minimum of 3 feet from the back of curb. Lights shall be placed a minimum of 5 feet from driveways or water and sewer services. The lighting plan sheet must be done to scale and show the location of the lights in relation to water and sewer services.

APPENDIX A

Application for Site Plan Review

APPLICATION FOR SITE PLAN REVIEW
City of Whitefish

Please complete all of the following information (type or print):

Project Name: _____
Project Address/Location: _____
Description: _____
Addition _____Multi-Family _____Commercial _____Institutional _____ Subdivision/P.U.D.'s _____

Send Review Comments To:
Contact Person: _____
Company Name: _____
Address: _____
City, State, Zip: _____
Phone Number: _____ Fax Number: _____
Cell Phone Number: _____ Email Address: _____

Owner/Developer (If different from above):
Contact Person: _____
Company: _____
Address: _____
City, State, Zip: _____
Phone Number: _____ Fax Number: _____

Description of Proposed Site Plan: _____
_____
_____
_____

Parcel No./Lot No.:_____
Zoning District: _____
Lot Dimensions/Acreage: _____

Date Submitted: _____ Received by: _____

updated 4/26/07

C:\Data\Site Review\APPLICATION FOR SITE PLAN REVIEW.doc

Eight (8) copies of a site plan, drawn to an acceptable engineering scale (typically 1" = 20') and accurately dimensioned shall be submitted to Sherri Baccaro at the Public Works Department. If a complete site plan application and a site plan are submitted a minimum of seven (7) days prior to the regular Thursday Site Review meeting, the site plan review will be placed on the agenda for that meeting (applications must be received by 5:00 p.m. the Thursday prior to the following meeting). All site plans shall include the following information:

_____ 1. North arrow.

_____ 2. Vicinity map clearly showing streets and location within the City.

_____ 3. Indication of scale.

_____ 4. All property lines with dimensions.

_____ 5. Internal and perimeter streets and drives.

_____ 6. All existing improvements on the property (structures, fences, driveways, sidewalks).

_____ 7. All adjacent rights-of-way.

_____ 8. All proposed improvements, including new construction, parking, landscaping, fencing, sidewalks, driveways, refuse disposal, snow storage areas, lighting, drainage, and any other proposed changes to the property (depending on project).

_____ 9. All existing utilities and utility easements and all proposed utility mains, extensions, and easements.

_____ 10. Existing and proposed fire hydrant location(s) and/or any proposed fire code related features. **If building being proposed is over two stories, the Fire Department needs building elevations.**

ALL ABOVE ITEMS MUST BE INCLUDED WITH THE APPLICATION. INCOMPLETE APPLICATIONS WILL NOT BE ACCEPTED.

_____ _____

Signature Date

APPENDIX B

Stormwater Facility Planting Guidelines

APPENDIX B
Planting Guidelines For Stormwater Facilities
Page 1

TYPE	ZONE	POND DEPTH
Edges and Upland	Transition	
Seasonally Flooded	SHALLOW	0-3"
Submerged, semi-permanently Flooded	MID	3"-18"
Permanently Flooded	DEEP or FLOAT	18-64"

NATIVE PLANTS

						Availability		
						SEEDS	PLANTS	CUTTINGS
Trees	*Alnus incana*	Thin-leaf Alder		Transition	SHALLOW	S	P	
	Betula occidentalis	Water Birch		Transition	SHALLOW		P	
	Populus balsamifera ssp.trichocarpa	Black Cottonwood		Transition			P	
	Populus tremuloides	Quaking Aspen		Transition			P	
Shrubs	*Acer glabrum*	Rocky Mountain Maple		Transition		S	P	C
	Actaea rubra	Baneberry		Transition		S	P	
	Amelanchier alnifolia	Saskatoon Serviceberry		Transition		S	P	
	Cornus stolonifera	Red-Osier Dogwood		Transition	SHALLOW	S	P	C
	Crataegus douglasii	Hawthorn		Transition	SHALLOW		P	
	Holodiscus discolor	Mountain Spray		Transition		S	P	
	Prunus virginiana	Common Chokecherry		Transition		S	P	
	Ribes cereum	Squaw Currant		Transition		S	P	
	Rosa woodsii	Woods Rose		Transition		S	P	
	Rubus parviflorus	Thimbleberry		Transition		S	P	
	Salix boothii	Booth's Willow		Transition	SHALLOW		P	C
	Salix bebbiana Sarg.	Bebb Willow		Transition	SHALLOW		P	C
	Salix drummondiana	Drummond Willow		Transition	SHALLOW		P	C
	Salix exigua	Coyote Willow		Transition	SHALLOW		P	C
	Salix geyeriana	Geyer's Willow		Transition	SHALLOW		P	C
	Sambucus racemosa	Elderberry		Transition		S	P	
	Symphoricarpos albus	Snowberry		Transition		S	P	
Forbs	*Adiantum pedatum*	Maidenhair Fern		Transition			P	
	Aster chilensis	Pacific Aster		Transition		S	P	
	Athyrium filix-femina	Lady Fern		Transition			P	
	Dryopteris expansa	Spiny Wood Fern		Transition			P	
	Geum macrophyllum	Large-Leaf Avens		Transition	SHALLOW	S		
	Iris missouriensis	Iris		Transition	SHALLOW	S	P	
	Maianthemum racemosa (Smilacina racemosa)	False Solomon's Seal		Transition			P	
	Mentha arvensis	Wild Mint		Transition	SHALLOW	S	P	
	Penstemon confertus	Yellow Penstemon		Transition			P	
	Pteridium aquilinum	Bracken Fern		Transition			P	
	Sisyrinchium montanum	Mountain Blue-Eyed -Grass	Swales, Wet meadows, Ditches	Transition		S	P	
	Solidago canadensis	Canada Goldenrod		Transition		S		
	Tellima grandiflora	Fringecup		Transition	SHALLOW		P	
	Trollius laxus	American Globeflower		Transition			P	
	Myosotis laxa	Small Flowered Forget -Me -Not		SHALLOW			P	
	Nuphar lutea ssp. polysepala	Yellow Waterlily		SHALLOW	MID	S		
	Potentilla anserina	Silverweed Cinquefoil		SHALLOW		S		
	Sagittaria latifolia	Duck Potato		SHALLOW			P	
	Veronica americana	American Speedwell		SHALLOW			P	
	Hippuris vulgaris	Mare's Tail		MID			P	
	Alisma plantago-aquatica	American Water-Plantain		MID	FLOAT		P	
	Caltha leptosepala	White Marsh Marigold		MID	FLOAT		P	

* For questions concerning Planting Guidelines, contact;
Dru Dennison 863-2410, City of Whitefish, Neighborhood Resource Officer

APPENDIX B
Planting Guidelines For Stormwater Facilities
Page 2

						Availability		
						SEEDS	PLANTS	CUTTINGS
Grass Like Species	*Agrostis exarata*	Spike Bentgrass	Rhizomatous	Transition	SHALLOW	S		
	Calamagrostis canadensis	Blue Joint Reed Grass	Bunch, Aggressive	Transition		S		
	Elymus glaucus	Blue Wildrye		Transition	SHALLOW	S	P	
	Elymus lanceolatus (Agropyron dastachyum)	Streambank Wheatgrass	Critana, Cultivar	Transition		S		
	Juncus balticus	Baltic Rush		Transition	SHALLOW	S	P	
	Juncus ensifolius	Daggerleaf Rush		Transition	SHALLOW		P	
	Juncus mertensianus	Merten's Rush		Transition	SHALLOW		P	
	Juncus tenuis	Slender Rush		Transition	SHALLOW		P	
	Pascopyrum smithii (Elymus or Agropyrum)	Western Wheatgrass	Sod Forming, rhizomatus	Transition		S		
	Alopecurus aequalis	Shortawn Foxtail	Wet Meadows, Streambanks, Ditches	SHALLOW			P	
	Beckmannia syzigachne	American Sloughgrass	Rapid early est. for 4-5 yrs till outcompeted	SHALLOW		S		
	Carex aquatilis	Water Sedge	Obligate	SHALLOW	DEEP	S	P	
	Carex lasiocarpa	Sleder Wetland Sedge		SHALLOW	MID		P	
	Carex nebrascensis	Nebraska Sedge		SHALLOW		S		
	Carex pellita (lanuginosa)	Wooly Sedge		SHALLOW	MID	S	P	
	Carex stipata	Owlfruit sedge		SHALLOW		S	P	
	Carex utriculata	Beaked Sedge		SHALLOW	MID		P	
	Carex vesicaria	Blister Sedge		SHALLOW	MID	S		
	Deschampsia cespitosa	Tufted Hairgrass		SHALLOW	MID	S		
	Glyceria elata	Fowl Mannagrass	Creeks, Ditch Bottoms	SHALLOW	MID	S	P	
	Eleocharis palustris	Common Spike Rush		MID	DEEP	S	P	
	Schoenoplectus (Scirpus) acutus	Hardstem Bulrush		MID		S	P	
	Schoenoplectus (Scirpus) microcarpus	Small-Flowered Bulrush		MID		S	P	
	Schoenoplectus (Scirpus validus) tabernaemontani	Softstem Bulrush		MID		S	P	
	Typha latifolia	Common Cattail	Will seed by itself- aggressive	MID				

Note: When seeding Wetland species; seeds need light to germinate.
Mix organic weed free compost into the top 4" of the soil, then seed, pressing seeds lightly into soil.

* For questions concerning Planting Guidelines, contact;
Dru Dennison 863-2410, City of Whitefish, Neighborhood Resource Officer

APPENDIX B
Planting Guidelines For Stormwater Facilities
Page 3

TYPE	ZONE	POND DEPTH
Edges and Upland	Transition	
Seasonally Flooded	SHALLOW	0-3"
Submerged, semi-permanently Flooded	MID	3"-18"
Permanently Flooded	DEEP or FLOAT	18-64"

ORNAMENTAL PLANTS

These species are ornamental and are suitable for urban wetlands in a non- native setting.

						Availability		
						SEEDS	PLANTS	CUTTINGS
Trees	*Acer negundo 'Sensation'*	Sensation Maple		Transition	SHALLOW		P	
	Acer rubrum 'Northwood'	Northwood Red Maple		Transition	SHALLOW		P	
	Celtis occidentalis	Common Hackberry		Transition	SHALLOW		P	
	Fraxinus pennsylvanica 'Patmore'	Patmore Green Ash		Transition	SHALLOW		P	
	Gleditsia triacanthos 'Skyline'	Skyline Honeylocust		Transition	SHALLOW		P	
Shrubs	*Aronia arbutifolia*	Red Chokeberry		Transition	SHALLOW		P	
	Clethra alnifolia 'Hummunigbird'	Hummingbird Summersweet		Transition	SHALLOW		P	
	Cornus alba 'Argenteo-marginata'	Euro. Variegated Dogwood		Transition	SHALLOW		P	
	Cornus alba 'Bailhalo'	Ivory Halo Dogwood		Transition	SHALLOW		P	
	Cornus sericea 'Flaviramea'	Yellow-Twigged Dogwood		Transition	SHALLOW		P	
	Cornus sericea 'Isanti'	Isanti Red-Twigged Dogwood		Transition	SHALLOW		P	
	Ribes aureum	Yellow Flowering Currant		Transition	SHALLOW		P	
	Rhus aromatica 'Grow Low'	Grow-Low Fragrant Sumac		Transition	SHALLOW		P	
	Viburnum trilobum (various cultivars)	American Cranberrybush		Transition	SHALLOW		P	

* For questions concerning Planting Guidelines, contact;
Dru Dennison 863-2410, City of Whitefish, Neighborhood Resource Officer

APPENDIX B
Planting Guidelines For Stormwater Facilities
Page 4

						Availability		
						SEEDS	PLANTS	CUTTINGS
Perennials	*Achillea millefolium cultivars*	Yarrow		Transition			P	
	Actaea racemosa (Cimicifuga racemosa)	Bugbane	Part to Full Shade	Transition			P	
	Adiantum pedatum	Maidenhair Fern	Part to Full Shade; Rich, moist soils	Transition	SHALLOW		P	
	Ajuga reptans	Ajuga	Part to Full Shade, Aggressive	Transition	SHALLOW		P	
	Aquilegia spp.	Columbine		Transition			P	
	Anemone canadensis	Canada anenome		Transition			P	
	Aruncus dioicus 'Kneiffii'	Kneiffii Goat's-beard	Part to Full Shade; Rich, moist soils	Transition			P	
	Aster novae-angliae 'Alma Potschke'	Alma Potschke Aster		Transition			P	
	Aster novae-anglia 'Purple Dome'	Purple Dome Aster		Transition			P	
	Astilbe spp.	Astilbe		Transition			P	
	Baptisia australis	False Blue Indigo		Transition			P	
	Bergenia cordifolia	Bergenia	Part to Full Shade	Transition			P	
	Chelone glabra	Turtlehead	Part Shade	Transition	SHALLOW		P	
	Echinacea purpurea	Purple Coneflower		Transition			P	
	Eupatorium maculatum	Joe Pye Weed		Transition			P	
	Filipendula rubra 'Venusta'	Queen of the Prairie	Part to Full Shade; Rich, moist soils	Transition			P	
	Heliopsis helianthoides ' Summer Sun'	False Sunflower		Transition			P	
	Hemerocallis spp.	Daylilly		Transition			P	
	Iris ensata	Japanese Iris		Transition			P	
	Iris pumila	Dwarf Iris		Transition			P	
	Iris reticulata	Dwarf Iris		Transition			P	
	Iris siberica	Siberian Iris		Transition			P	
	Liatris spicata	Gayfeather		Transition			P	
	Ligularia stenocephala 'The Rocket'	The Rocket Ligularia	Afternoon Shade	Transition	SHALLOW		P	
	Ligularis stenocephala 'Little Rocket'	Little Rocket Ligularia	Afternoon Shade	Transition	SHALLOW		P	
	Lobelia cardinalis	Cardinal Flower		Transition	SHALLOW		P	
	Matteuccia struthiopteris	Ostrich Fern	Part to Full Shade; Rich, moist soils	Transition			P	
	Monarda didyma	Bee- Balm	Afternoon Shade	Transition			P	
	Osmunda cinnamomea	Cinnamon Fern	Part to Full Shade; Rich, moist soils	Transition			P	
	Penstemon digitalis	Penstemon		Transition			P	
	Rodgersia spp.	Rodgersia	Part to Full Shade	Transition	SHALLOW		P	
	Rudbeckia hirta	Becky Black Eyed Susan		Transition			P	
	Rudbeckia fulgida 'Goldsturm'	Goldsturm Black Eyed Susan		Transition			P	
	Scabiosa columbaria 'Butterfly Blue'	Butterfly Blue Pincushion Flower		Transition			P	
	Scabiosa columbaria 'Pink Mist'	Pink Mist Pincushion Flower		Transition			P	
	Solidago hybrids	Goldenrod		Transition			P	
	Thalictrum rochebrunianum	Lavender Mist meadow Rue	Part to Full Shade; Rich, moist soils	Transition			P	
	Tiarella cordifolia (various cultivars)	Foam Flower	Part to Full Shade; Rich, moist soils	Transition			P	
	Trollius chinensis 'Golden Queen'	Golden Queen Globeflower		Transition			P	
	Trollius laxus	Globeflower		Transition			P	
	Verbena hastata	Blue Vervain		Transition	SHALLOW		P	
	Asclepias incarnate	Swamp Milkweed		SHALLOW			P	
	Caltha palustris	Marsh marigold		SHALLOW			P	
	Iris versicolor	Blue Flag Iris		SHALLOW			P	
	Menyanthes trifoliata	Bog Bean		SHALLOW			P	
	Mertensia virginica	Virginia Bluebell		SHALLOW			P	
	Saururus cernus	Lizards's Tail		SHALLOW	MID		P	
	Nymphaea 'Comanche'	Hardy Water Lily		MID	DEEP		P	
	Nymphaea 'James Brydon'	Tropical Water Lily		MID	DEEP		P	
	Nymphaea 'Marliacea Chromatella'	Hardy Water Lily		MID	DEEP		P	
	Nymphaea 'Pygmaea Helvola'	Hardy Water Lily		MID	DEEP		P	
	Nymphaea 'Sunny Pink'	Hardy Water Lily		MID	DEEP		P	

* For questions concerning Planting Guidelines, contact;
Dru Dennison 863-2410, City of Whitefish, Neighborhood Resource Officer

APPENDIX B
Planting Guidelines For Stormwater Facilities

						Availability		
						SEEDS	PLANTS	CUTTINGS
Grass Like Species	*Carex flacca*	Blue Sedge		Transition			P	
	Deschampsia caespitosa	Tufted Hair Grass		Transition			P	
	Deschampsia caespitosa ' Bronzeschleier'	Bronze Veiled Tufted Hair Grass		Transition			P	
	Deschampsia caespitosa ' Goldgehaenge'	Golden Pendant Tufted Hair Grass		Transition			P	
	Deschampsia caespitosa ' Schottland'	Scottish Tufted Hair Grass		Transition			P	
	Dryopteris expansa	Spiny Wood Fern		Transition			P	
	Osmunda cinnamomea	Cinnamon Fern		Transition			P	
	Panicum virgatum ' Prairie Sky'	Prairie Sky Switch Grass		Transition			P	
	Panicum virgatum ' Rotstrahlbusch'	Red Switch Grass		Transition	SHALLOW		P	
	Schizachyrium scoparium	Little Bluestem Grass		Transition			P	
	Sorghastrum nutans	Indian Grass		Transition			P	
	Carex grayi	Gray's Sedge		SHALLOW			P	
	Carex riparia 'Variegata'	Variegated Greater Pond Sedge		SHALLOW	MID		P	
	Carex squarrosa	Squarrose sedge		SHALLOW	MID		P	
	Carex vulpinoidea	Fox Sedge		SHALLOW			P	
	Typha minima	Bullrush		SHALLOW			P	

* For questions concerning Planting Guidelines, contact;
Dru Dennison 863-2410, City of Whitefish, Neighborhood Resource Officer

APPENDIX C

Excavation/Right of Way Permit

PERMIT#_____

EXCAVATION/RIGHT OF WAY PERMIT DATE:_____

NOTE: No permit shall be issued without **CURRENT** Montana Contractors License, Insurance and Bonding on file with the Public Works Department.
It is the CONTRACTORS RESPONSIBILITY to use OSHA approved shoring

PROPERTY OWNER:_____

PROJECT LOCATION:_____

CONTRACTOR:_____CONTACT PHONE:_____

MT CONTRACTORS LIC. #_____CITY BUSINESS LIC. #_____

CURRENT BONDING? _____ CURRENT INSURANCE? _____

PURPOSE OF PERMIT (check all that apply):

_____Water Tap/Line _____Elect. Utility _____Driveway

_____Sanitary Sewer Tap/Line _____Phone Utility _____Curb/Gutter

_____Storm Sewer Tap/Line _____Sidewalk _____General Excavation

_____Gas Utility _____Other_____

Description of Work:_____

Plumber (If Water Sewer or Storm) or Firm_____

_____

If fire hydrant is to be shut off or moved or road closed, applicant must notify the Fire Dept.

START DATE:_____ END DATE:_____

DESTINATION OF EXCAVATED MATERIALS:_____
(physical address)

I am familiar with the portions of the Standards for design and Construction for the City of Whitefish and any subsequent requirements that apply to the work I have described above and agree to abide by such. I have in effect the required Liability Insurance and Bonding.

SIGNED:_____ DATE:_____ FEE: $25.00 CHECK:_____ CASH_____
(contractor)

PERMIT ISSUED BY:_____

TRAFFIC PLAN APPROVED BY:_____

INSPECTION BY:_____ DATE:_____ APPROVAL_____

REMARKS:_____

_____

City of Whitefish - Public Works Department
Construction & Maintenance Division

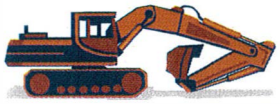

EXCAVATION GUIDELINES

<u>This is a general guideline and check-list and does not contain all the necessary information or all of the requirements needed for excavating within the City of Whitefish.</u>

The Excavating Contractor should be familiar with the latest editions of the following documents: The City of Whitefish Standards for Design and Construction, the Montana Public Works Standard Specifications, the Manual on Uniform Traffic Control Devices, the Montana Department of Transportation's Manual for Work Zone Safety, OSHA and all other applicable Federal, State and Local laws and requirements.

Permits

- ☐ The Excavating Contractor must have a completed, signed, and approved copy of a City of Whitefish Excavation/Right-of-Way Permit in their possession **prior to excavating** in any City R.O.W.
- ☐ Additional permits may be required before an excavation begins depending on the location and the nature of the excavation, i.e., State and County R.O.W. permits, and City grading and utility permits.
- ☐ The Contractor must have a current City of Whitefish Business License, proof of insurance, and have the required bond on file with the City Clerk's office.

Utility Locates

- ☐ A One-Call System (UDIG) utility locate request must be fulfilled prior to beginning any excavation within the City of Whitefish. Forty-eight (48) hour advance notification is required and will be enforced.
- ☐ The Contractor will mark the proposed excavation site with **white** paint and/or **white** marking flags in accordance with APWA/UULC Standards.

Traffic Control

- ☐ A Traffic Control Plan must be submitted to the Public Works Department for approval, at least forty-eight (48) hours prior to the commencing of an excavation. The contractor must also notify the City Police and Fire Departments at least forty-eight (48) hours prior to any street or alley closure. A news release to the news media is also required at least two (2) days prior to the beginning of any construction activity that requires road or lane closures.

- ☐ All traffic control devices used must meet the MUTCD 2003, Montana Public Works Standard Specifications and City of Whitefish Standards for Design and Construction. Devices remaining during night hours will be constructed of reflective material, illuminated or lighted as required.

- ☐ **All traffic control devices must be in-place prior to the commencement of the excavation and left intact until the street is reopened to the general public.**

Tracking Pads

- ☐ Only one access route is allowed to an excavation or construction site. A single tracking pad must be installed before excavating or hauling commences. All vehicles and equipment must enter/exit thru the tracking pad. The pad will be replaced or cleaned as needed when the material becomes contaminated and no longer functions. *(See City of Whitefish Standards for Design and Construction for the detail on tracking pads.)*

Inspection

- ☐ The City may require a pre excavation "walk thru" inspection of the proposed site prior to startup with the Excavating Contractor.

- ☐ The Contractor must place a request with the Public Works Department, **at least two (2) hours** prior to backfilling, for an inspection of the excavated area, available compaction equipment and backfill materials. Inspections during compaction and a final inspection after paving will also be required.

Backfill Requirements

- ☐ 100% imported backfill is required in all City R.O.W.; the use of specific types of native backfill may be accepted, however exclusive approval by the City Engineer must be obtained first All excavated materials will be immediately loaded into trucks, removed from the site and disposed of by the Contractor. Excavated materials will not be stockpiled on City R.O.W.

- ☐ The Contractor is only allowed to excavate the amount of trench which can be compacted and backfilled within each work day.
- ☐ All City of Whitefish Standards for Design and Construction and/or Montana Public Works Standard Specifications requirements for the type and compaction

of backfill materials must be met. Density and gradation submittals on the backfill material may be required.

- ☐ Compaction testing may be required by the City at the Contractor's expense.

- ☐ The Contractor will be responsible for **daily** maintenance of the excavation until final asphalt paving is completed. 3/4 inch minus crushed top surfacing will be used for this purpose.

Asphalt Pavement

- ☐ Pavements must be cut with a saw or pneumatic asphalt breaker **prior** to excavating. The trench will be cut along a neat vertical line **a minimum of 12" from each edge of the trench opening.** (For example: If the excavator bucket width is 2', then the width of the asphalt cut must be a minimum of 4', with the excavation centered between the two cuts.)

- ☐ If any adjacent longitudinal or transverse joints or cracks are less than 3' from the cut lines, the pavement will be removed and replaced to that joint or crack.

- ☐ Additional asphalt cuts will be required if the cut edges or adjoining sections of asphalt are disturbed during excavation.

- ☐ **All permanent paving must be completed within seven (7) working days.**

- ☐ Trench edges must be cleaned and a tack coat (SS-1, SS-1h or approved equal) applied before placing asphalt.

- ☐ Do not place asphalt hot-mix when the air temperature is less than 40°F and rising. Do not place asphalt upon a surface which is frozen or that has a temperature less than 32°F. Paving is not allowed during rainfall or if standing water is encountered.

- ☐ Pavement replacement: A **minimum** of four (4) inches' of Hot-mix Asphalt (PG 64-34) placed in two (2) properly compacted lifts. In no case will the new replacement be less than the existing section. Compaction testing may be required by the City at the Contractor's expense.

- ☐ Temporary paving with a "winter" mix asphalt such as UPM or QPR is allowed only when Hot-mix Asphalt is not available; a three (3) inch minimum thickness is required. The contractor will maintain the temporary repair until final paving with Hot-Mix is completed. The Public Works Department may require the use of lean concrete in place of the cold-mix asphalt.

- ☐ Crack sealing of all asphalt joints may be required.

Gravel Surfaced Roads & Alleys

- ☐ Backfill and compaction requirements are the same as for paved roads, except

that the final lift of material will be eight (8) inches of 3/4 inch minus crushed top surfacing.

☐ Excavated areas in gravel must be regularly maintained by the Contractor for a period of two (2) years after backfill has been completed.

Haul Routes - Site & Route Cleanup

☐ A haul route map showing proposed direction of travel must be submitted and approved by the Inspector before excavating begins.

☐ The excavation site and truck haul routes **must** be cleaned of all debris, dirt or dust prior to the end of **each** project day by the Contractor. A vacuum style street sweeper must be used. Additional cleaning(s) during the day may be necessary as conditions warrant. Failure to comply may result in the issuance of a monetary fine or a stop work order.

Warranty

☐ The Contractor is responsible for maintaining and or repairing any and all defects or failures in the excavation area; including but not limited to ditch settlement and asphalt failure for a period of two (2) years. The City will give notice of observed defects with reasonable promptness. In the event the Contractor fails to make such repairs, The City will have the repairs performed and charge the Contractor the cost thereby incurred.

Other

☐ **Federal (OSHA) regulations require that the excavation be designed to provide worker protection if the excavation is greater than 5' deep or if it less than 5' deep and there is indication of a potential collapse or cave-in. A trained Competent Person should be onsite at all excavations.**

☐ If construction fabric or geotextiles are encountered and disturbed in the existing road base, repairs to the fabric must meet the requirements of the Fabric Manufacturer and the Whitefish Public Works Department. The fabric is to be uniformly cut, not torn, ripped, or pulled by the excavator. Typically the repair consists of overlapping the existing fabric by 2' with the newly placed section.

☐ Any existing facility that is damaged during the excavation such as water and sewer lines, manholes and covers, valve boxes, storm inlets, culverts, concrete sidewalks, curb or gutter sections, and traffic or street signs must be repaired or replaced immediately.

☐ Any paint striping such as center lines, edge lines, parking lanes, or x-walk lines disturbed must be repainted within three (3) working days. Temporary lane markings or traffic control devices will be used until final striping is completed.

- ☐ The shallowest portion of any buried pipeline, conduit or other facility should not be less then forty-two (42) inches below the roadway surface.

City of Whitefish - Public Works Department
418 E. 2nd Street
P.O. Box 158
Whitefish, MT 59937

406.863.2456 or 406.863.2457
Fax: 406.863.2419

http://www.whitefish.govoffice.com/

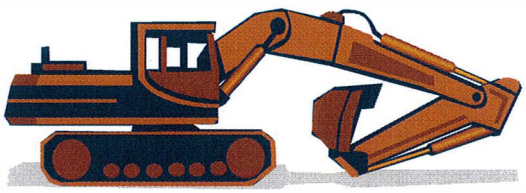

APPENDIX D

Engineered Plan Requirements, Plan Review Checklist & General Notes

ENGINEERING PLAN REQUIREMENTS

1. Title Sheet

a. Project name and legal description of property

b. A location map showing the project site, road names, north arrow, scale, and associated landmarks

c. Key map, on drawing sets of three sheets or more, of a scale reflecting the entire project

d. Index of sheets

e. Location of existing and proposed utilities

f. Development data including size and quantity of improvements

g. Legend and abbreviations

h. Design Engineer's name, registration number, and signature (Note: all original sheets of plans shall have a seal and original signature of the design engineer)

i. Name, address, and telephone number of the project proponent and of his/her representative who will act in authority for the project proponent

j. The Approval Block (**Standard Detail SD-1a)**

k. General Notes

l. Record Drawings Certificate (**Standard Detail SD-1b)**

m. All improvement plans with City of Whitefish facilities shall include the correct City of Whitefish horizontal and vertical control on the plans

n. Designate all streets and utilities that are privately owned

2. Plan and Profile Sheets

The size of the plans shall be 24"x36". The plans shall show all existing facilities and improvements to be constructed. Scales shall be 1"=40' horizontal and 1"=4' vertical; or 1"=50' horizontal and 1"=5' vertical; or other scales may be used as necessary to show plan details. The stationing interval shall be 50' or 100'.

Streets

a. Vertical and horizontal curve data

b. Indicate roadway centerline and stationing along centerline

c. Indicate slopes of centerline, sidewalks and gutter lines if necessary

d. Indicate right-of-way location and survey monuments

e. Indicate radii and grades at the ends, midpoint and ¼ points of curb returns
f. Indicate drainage system and location
g. Typical section
h. Demonstrate that streets may be extended through adjacent properties if so required
i. Show location, direction, size and type of MUTCD number of all permanent street signing on a separate plan sheet
j. Show location and size of any postal delivery boxes to be placed on public right-of-way
k. Show location of streetlights
l. Appropriate site distances
m. Handicap ramps at all sidewalk intersections
n. Curb inlet basins on all arterial and collector streets
o. Drainage control at low spots and storm sewers at sag curves
p. Slope easements
q. Clear vision area at intersection

Sewer

a. Location of manholes, sewer line and services
b. Stationing along sewer line
c. In and out invert elevations at manholes
d. Sewer is designed and extended to provide service to adjacent properties.
e. Special details
f. A profile demonstrating that sufficient cover shall be maintained and showing finished street where applicable
g. All utilities with conflicts indicated
h. Sewer service provided to each lot with station and offset at end of service line
i. 4-inch minimum schedule 40 sewer service size
j. Sewer manholes located on street centerline for 36-foot or wider streets and 6-feet from centerline on narrower streets.
k. Slopes, distances and diameter of main runs
l. Manholes identified

Water

a. Location of valves, fittings, fire hydrants and services

b. Stationing along waterline
c. Water system is designed and extended to provide service to adjacent properties
d. Special details
e. A profile demonstrating that sufficient cover shall be maintained and showing finished street grade where applicable
f. Fire flow requirement
g. All utilities with conflicts indicated
h. Service to each lot with station and offset at end of service line
i. 6-feet minimum cover
j. Pipe curvature radius and/or joint deflection angle
k. Fittings specified with stations
l. All fire service lines shall require an engineered plan and profile signed by a Professional Engineer

Grading and Drainage Plan

a. Existing and proposed contours extending 50 ft. into adjacent properties; clearly identify areas of cut or fill
b. Existing roadways and structures
c. Erosion control and slope stabilization measures to be in place prior to and during construction
d. Erosion control/slope stabilization/re-vegetation measures following final grading
e. Dust control and other mitigation measures to be used during grading/clearing and until re-vegetation or stabilization has been completed for all graded areas and slopes
f. Tree plan showing all trees 8-inch diameter at breast height (dbh) and larger
g. Construction access/gravel construction entrances shown
h. Temporary drainage control measures for entire site
i. Permanent drainage improvement plan, including drainage basin boundaries, areas, and test volume calculations
j. Location by station for drywells/drainage facilities
k. Drainage easements
l. Existing or natural drainage courses, canals, rivers, ponds
m. Areas of cut or fill greater than two feet
n. Critical areas to be preserved.
o. Soils information where required

Signage

a. Show location, direction, size and type of MUTCD number of all permanent street signing

Street Lighting

a. Show location of City of Whitefish approved streetlights and the wiring plan.

Landscaping

a. Show the location of the required landscaping

GENERAL NOTES

The following standard general construction notes to be shown on the title sheet:

a. "All work shall be performed in accordance with the "Design and Construction Standards" of the City of Whitefish, and shall be completed to the satisfaction of the Director of Public Works. In the event that a design element does not reflect City standards, the matter must be immediately brought to the attention of the Engineer and the Director of Public Works. The Engineer shall be responsible for recommending a solution or alternative solutions to the City for review and approval."

b. "These Plans have been checked by the City of Whitefish only for conformance with the "Design and Construction Standards," compliance with development agreement conditions, and for general conceptual approval of public improvements as shown. The City's review does not verify or ensure the accuracy of existing or proposed dimensions, lines, coordinates, or grades shown, including all existing utilities shown or not shown."

c. "Utility locations shown reflect available record data. The Contractor shall take precautionary measures to protect all utility lines shown and other utility lines otherwise located. The Contractor shall contact the "Montana One Call Center / U-DIG" at (406) 752-6811 for utility locates giving a minimum of 2-full working days notice prior to beginning construction." Once located it shall be the contractor's responsibility to maintain markings.

d. "Before work begins, the Contractor shall obtain a permit to work in the right of-way from the City and must notify the City Right-of-Way Inspection staff at least 24 hours in advance of commencing construction activities."

e. "The Contractor shall obtain and maintain a complete and approved set of Construction Plans. These drawings, and any required permits, shall be available at the project site at all times and shall be made available to the City staff upon request. If construction plans are not readily available at the project site, the Director of Public Works may issue a stop work order and halt all construction activities pending compliance by the Contractor."

f. "The Contractor agrees to comply with the provisions of the Traffic Control Plan and the "Manual on Uniform Traffic Control Devices," Part IV, for construction signage and traffic control."

g. "All surplus materials, tools, and temporary structures, furnished by the Contractor, shall be removed from the project site by the contractor. All debris and rubbish caused by the operations of the Contractor shall be removed, and the area occupied during construction activities shall be restored

to its original conditions, within 48 hours of project completion, unless otherwise directed by the Director of Public Works."

h. "The Contractor is required to provide and maintain erosion and sediment control measures in accordance with the approved erosion control plan. The Director of Public Works may require the contractor to provide additional erosion control measures due to unforeseen erosion problems or if the plans do not function as intended."

i. "A Pre-Construction meeting with the City of Whitefish is required prior to the start of construction."

j. "All work shall be performed by City approved Contractors."

CITY OF WHITEFISH
PLAN REVIEW CHECKLIST

SUBDIVISION NAME _____ **DATE SUBMITTED** _____

REVIEWING ENGINEER _____ **DATE REVIEWED** _____

YES	NO	N/A	*Preliminary Items*
			Provide four (4) set of plans to Public Works Dept. (distributed to Denny, Karin/Greg, Whitefish Water District, Doug Loy-Fire Department)
			Plan review fee paid. Note if ½ of full fee or full fee paid.
			Review Preliminary Plat Conditions and attach to the plan checklist. Check Preliminary Plat layout and compare.
			Compare to City Master Waster, Sewer and Drainage Plans. Do sewer and water extend to property limits? How does this project fit with adjacent proposed projects? Do we want main extensions if only a few services are included?
			Conditions when individual services are required: Duplex – same owner; 2 water and 1 shared sewer service. Town home – separate owner; 2 water and 2 sewer services.

YES	NO	N/A	*General Plan and Cover Sheet Review*
			Title Block (Engineer's name, address and phone number, project name, name of sheet, sheet __ of __, date designed, dates drawn, surveyed, checked and revised).
			Engineer's Stamp (signed, dated) on cover
			Approval Block for Public Works Director and Fire Marshal signatures (on cover sheet).
			Table of Contents (on cover sheet).
			Vicinity Map required for all plan sets.
			North Arrow & Bar Scale on Each Plan Sheet.
			Legend & Abbreviations.
			Benchmarks and Datum (must be NAVD 88 and located on cover or plan sheet).
			Overall Site Utility Plan (showing all exiting utilities and easements). Overall site plan required if more than 4 plan sheets. This can be at a smaller scale i.e. 1"=100' or so.
			Engineering Design Report required.
			Traffic Study required if stated as a condition of preliminary plat.
			Check that 10' Utility Easement is provided for behind ROW line.
			Separate sheets shall be used for streets, sewer, storm, and water. Sewer and water shall not be shown on the same plan and profile sheets.

YES	NO	N/A	*Street System Review*
			Include 5 foot utility easement for gas, electrical, cable.
			Street Plan/Profile (show existing and proposed grades and alignments for streets, sidewalks, curb and gutters, boulevards, right-of-ways, signage). Profile Views Provide 0.5% minimum grade to provide lateral storm water drainage to basins or other relief features (on roads with curb and gutter). Grades must be shown in decimal form with (+ or -) slope on all profile views.

			Vertical information, low point, high point, VPI, BVC, EVC, need to be clearly shown on all profile views.
			Plan Views - Stationing and Layout PC, PT, PI and Intersections shall be stationed accordingly. Curve information, delta, radius, length, and tangent shall be noted. Provide spot elevations, curb returns, begin curb radius (BCR) and end curb radius (ECR). Provide stationing for all proposed streets.
			Sidewalks Provide with and type of driveway entrances proposed. Provide handicap ramps as required, provide detail on ramps. Provide for boulevards.
			Driveways Max width of 22' for residential lots. Nearest edge of driveway shall not be less than 35' to the closest edge of the pavement of an adjacent intersection. 6" of concrete is required for approaches. Show distance between driveways.
			Road Sections Show pavement widths and thicknesses, gravel widths and thicknesses, stabilization fabric with specifications. Provide minimum 2% crown or cross sloping on all sections for surface drainage.
			Snow Removal Provide snow removal locations, especially around cul-de-sac areas. Provide drainage plan for melting snow.
			Standard Curb and Gutter Street section shows standard curb and gutter (drive over curb is not allowed).
			Trench Cuts into New City Streets Streets built within the last 10 years have geotextile fabric. Include not that a 2-foot overlap of the fabric is required; fabric shall be cut and not ripped. The City inspector or engineer must inspect the overlap of fabric. Also match existing section of street.
			Street Signage Sheet Street name and traffic control signs – specifications on materials and posts Need location sheet with conflicts of trees and lights. Show trees and other obstacles.
			Right-of-Way Width and boundary shall be clearly marked and identified.

YES	NO	N/A	***Grading and Erosion Control Sheet***
			Existing Topography show (existing buildings, trees, bodies of water, etc.). Existing and proposed contours of at least 2-foot intervals.
			Proposed Final Grades (contours or spot elevations) and Site Topography.
			Catch basin inlet protection, tracking pad, stabilization of disturbed areas, construction sequence, phasing of large projects, clearing limits, silt fence or wattles on down slope property line.
			Show trees that are going to be removed.

YES	NO	N/A	***Storm Drain Review***
			Drainage plan required when >5000 sq. ft. impervious surface is added to the site.
			Profile Views Provide profile view for proposed storm drains (required for primary drainage lines > 100 feet). Provide stationing, offsets, and elevations for all storm drain elements. Provide maximum spacing on 400 feet between manholes.
			Plan Views - Easements and Right-of-ways Check slopes and widths of proposed drainage ditches with provided easements and right-of-ways. When drainage easements are required, make sure they are recorded. Check minimum grade requirements for drainage pipe. Put pipe sizes on Plan View.
			Material and Sizing Minimum diameter of 12 inches shall be used for all storm drains (Variance allowed for 8" where engineering report justifies). Minimum diameter of 8 inches shall be used for inlet laterals.
			Maintenance Plan Required for Privately Maintained Detention and Conveyance Facilities – (Note on Cover Sheet).
			Details

			Provide details for inlets, manholes and lids, concrete collars. Cover and manhole ring shall be Inland Foundry 772-A, Olympic Model 37 or approved equal.

YES	NO	N/A	*Sanitary Sewer System Review*
			Profile Views Invert and rim elevations shown. Size, length and grades of pipe clearly shown. Show exiting and proposed utilities.
			Plan Views Flow direction clearly shown. Provide service to property boundary of each lot with proposed or existing buildings. Distance to existing and proposed water mains and services clearly shown.
			Maximum Manhole Spacing 400' for slopes from 0.4% to 4.0% 300' for slopes from 4.0% to 8.0% 200' for slopes greater than 8.0%
			Manhole Type Designation Manholes shallower that 3' are impractical. Doghouses are not allowed. Manhole fillet on bottom to be precast (not cast in place). All manholes shall be numbered with station and offsets on all plan and profile views.
			Drop Manhole Use drop manhole if sewer drop > 24".
			Core Drilling Existing Manhole For existing manhole to be core drilled use link seal or approved equal to seal hole. (Link Seal LS-475-C-12)
			Manhole Rubberized Chimney Seals Chimney Seals shall be Cretex (or approved equal) meeting ASTM C-923 with a minimum thickness of 3/16".
			Pipe Sizing (part of engineering report) Verify that sewer improvements meet proposed and future flow demands per state regulations.
			Check Sewer Grades and Verify Inverts: 8" dia., 0.4% min. slope; 10" dia., 0.28% min. slope; 12" dia., 0.22% min. slope. Place at minimum grade for future extensions where practical.
			Sewage Velocities All systems shall be designed to transport sewage between the ranges of 2 to 10 feet per second. If > ___ fps. Blocking requirement per DEQ.
			Sewer Line is Straight Incorporate alignment changes into manholes. Flow angles shall not be less than 90 degrees through manholes.
			Sewer Line Terminal Ends Terminate with manhole. Install stub-outs when possible past pavements. Extend sewer to end of property.
			Manhole and Cleanout Locations All manholes and cleanouts shall be placed within right of ways and shall avoid low-lying areas to prevent storm water inflows.
			Minimum Sewer Clearances with Other Utilities 12" min. vertical separation with storm sewers (**guideline**). 18" min. vertical separation with water mains. 10' min. horizontal separation with water mains. 5' min horizontal separation with storm sewer and sanitary force mains (**guideline**).
			Sanitary Sewer Cover Min. 4 feet of cover is required. Determined by proposed final grade. Max. 15 feet of cover from proposed final grade to sewer invert elevation (**guideline**). Detectable warning tape 18" below finish grade along all sewer trenches is required. Min. 6 feet for force mains. Material for Manhole Ring and Cover –East Jordon Iron Works Model 3772Z1 or approved equal. Sealed lids with O-Ring in wet areas.
			Pipe Changes All pipe size and material changes shall take place only at manholes.
			Sewer Service Laterals Extend out perpendicular from the gravity main to right-of-way. Must extend a min. of 3 feet beyond property line to prevent damage to sidewalk.
			Materials Sanitary Sewer Services – PVC schedule 40. Sanitary Sewer Mains – PVC SDR 35. Sewer Saddles – Use Romac Saddle: CB-4.63 U.N. (for any main type).

			Septic Tank Abandonment If existing septic tank, provide note that tank is abandoned in accordance with UPC latest edition.
			Sewer Line Location Limitations Shall not be placed underneath sidewalks, curb and gutter, etc. Exception would be crossings for a short length.

YES	NO	N/A	***Sanitary Sewer Pumping Station Review***
			Study Detailing Proposed Development Impacts to Existing Lift Stations
			Study Detailing Proposed Development with the Addition of a New Lift Station
			Pumping Stations Limitations Stations shall only be used when gravity systems are not feasible.
			Emergency Power Supply Shall be required unless approved by the Public Works Director.
			Alarm System Phonetics Inc. / Sensaphone 1400 shall be used and linked by telephone dialer system. Appropriate phone numbers to be programmed by the City.
			Electrical Surge Protection Required for all stations.

YES	NO	N/A	***Sanitary Sewer Force Main System Review***
			Materials HDPE SDR 11 with butt fusion joints or HDPE 160 SDR11.
			Thrust Blocks Shall be used at all tees, bonds, offsets or plugged ends.
			Dead Ends A valve with thrust block shall be installed at all dead ends.
			Compliance with the City's Master Sewer Plan and State Regulations
			Air Release Valves To be placed at all high points on force main lines.
			Cleanout Spacing Cleanouts need to be spaced a min. of 300 feet. Check cleanout detail.
			Service Details Check service details for connection to force main.
			Existing Force Main Connections Valves shall be placed at all new force main connections to existing lines. Valve shall be placed on the upstream side of the connection and secured by a thrust block.

YES	NO	N/A	***Water System Review***
			Profile Views Provide profile view for all proposed water mains. Provide stationing, offsets and elevations for all water system elements.
			Plan Views with System Map Showing existing and proposed with main size, valves, hydrants and services. Show water main separation distances to sewer utilities. Service provided to each lot, including undeveloped. Provide backflow prevention devices as required per FCCHR.
			Materials Water main shall be PVC-C-900 DR 18 (235 psi) pipe for pipe < 12" diameter only. Minimum water main diameter shall be 8 inches.
			Fittings Provide thrust blocks for all fittings. Provide an eccentric or rotated 'T' at low point in main for sediment removal.
			Sewer Separation 18" min. vertical separation with sanitary and storm sewer lines. 10' min. horizontal separation with sanitary and storm sewer lines.
			Pressure Relief Valves Show on plans which lots require PRV's.

			Fire Hydrants Shall be placed at 360' intervals and in accordance with Fire Dept. requirements. Shall be placed on property lines fronting main. Concrete thrust block shall be noted on detail. All water systems shall meet minimum fire flow requirements. Mega lug restraints are required in addition to thrust blocks. Provide fire hydrant for blow off at high point and as blow off for dead end lines. At end of line provide fire hydrant, valve then 10 ft. stub.
			Curb Boxes Avoid placing in sidewalks, concrete or future driveway locations. Place inside street side of sidewalk centered in boulevard.
			Service Saddles Provide power seal, Romac stainless steel full circle design.
			Water Services and Curb Stops Service lines shall all be 1" Type K copper tubing or polyethylene pipe. Curb stop shall be ball valve Mueller 300 Ball Curb Valves with Insta-Tite or 110 compression fittings. SS liners are required for 110 compression fittings on PE pipe. Old services that are to be tied into new main need to be replaced to curb box as needed to meet current standards. Service must extend 3 feet beyond property line to prevent damage to sidewalk. Don't allow water services and curb stops within the concrete approach (City would be responsible to replace concrete in future). Check for abandonment notes for old services. Always abandon at corp. stop. Water services shall not be installed in the same trench excavated for fire hydrant leads. Min. 5 ft. separation between services and hydrant leads. Separation between water service taps min. 2.5 times the main pipe diameter.
			Couplings Mechanical Joint ductile iron solid sleeve only.
			Water Main Backfill Both toning wire and warning tape need to be called out in the details. Provide minimum of 6 feet of backfill to final grade upon all water mains. Each water sheet needs to have "minimum 6' bury" note on it.
			Valves All valves shall be fitted with a thrust block. Valves shall be located at not more that 800' intervals. Valves shall be placed at the ends of each main with a 10' capped stub. Dead ends shall be minimized by looping. Valves shall be positioned in a manner that allows system repair and maintenance upon the entire system. Check that a valve is provided for future extensions. At low point on main provide eccentric tee reducer or rotate tee downward for sediment removal.
			Tapping Contractor to install sleeve and test, City to tap. Tapping fee is $.
			Provide Anchoring Requirements on Steep Water Mains

YES	NO	N/A	***Utility Detail Sheet or General Notes***
			No Pea gravel allowed for pipe bedding.
			Sewer Manholes - Rings 2 maximum, 12 –inch max. (if 1 ring then 1-12 inch, if 2 rings then 2-6 inches). External Chimney seals are required on manholes.
			Include detail for blow off fire hydrant with eccentric reducer for air release. Include detail for an eccentric or rotated "T" at low point in main for sediment removal.
			Include water and sewer service detail with curb box location in boulevard.
			For condos (see water service and meter pit Standard Detail).
			Fire Hydrant detail needs to include a note that fire hydrant to be +/- 0.1 feet from finished grade to bury line.

YES	NO	N/A	***Lighting Plan Sheet***
			Show Location – Trees, Lights, and Signs on plans. Lights; number required, service (electricity) location and specify type. Conflicts – Sign Posts. Driveways – No poles across from driveways.

APPENDIX E

Cold Weather Construction Requirement Agreement and Inspection Log

Cold Weather Construction Requirements for Public Infrastructure

The following requirements shall apply to cold weather construction of new water mains, sewer mains, storm sewer mains, roads, appurtenances, and earthwork in the existing or proposed public right of way and shall be in effect when the air temperature is lower than 32 degrees or when frozen soils conditions exist. The Owner must indicate their acceptance of these requirements by signing below prior to the start of work.

Inspection Requirements

1. Full time inspection is required under the supervision of a Montana licensed civil engineer.
2. The Field Inspector shall document on-site activities using the DAILY INSPECTION LOG FOR COLD WEATHER CONSTRUCTION provided by the Pubic Works Department, or an approved equivalent. An inspection log shall be completed for each day of active construction, signed by both the Field Inspector and the Project Engineer, and submitted to the Public Works Department on the following business day.
3. The Project Engineer shall provide the Pubic Works Department with current proctor test results for all backfill material prior to use of that material.
4. The Field Inspector shall perform or oversee soil compaction testing for all backfill material to verify optimal moisture content and compliance with approved specifications. Compaction tests shall be at taken at horizontal intervals of less than 100 feet and at various depths, with 50% of the tests in the lower half of the trench or road section.

Warranty Requirements

1. Prior to connecting any new mains to existing City facilities, the Owner shall enter into a two year warranty agreement with the City for all water mains, sewer mains, storm sewer mains, roads, appurtenances, or earthwork constructed in the public right of way or proposed right of way during cold weather conditions. The warranty shall be enforced by means of a letter of credit issued by a local bank in the City's name. The letter of credit shall provide an amount equal to 20% of the Project Engineer's estimate for the cost of improvements. The Public Works Director must approve the cost estimate prior to issuance of the letter of credit.

Construction Requirements

1. A competent Project Supervisor, employed by the General Contractor, shall be on the job site continuously during periods of active construction.
2. No frozen material shall be placed in backfill areas and all frozen soil, aggregate, snow, ice or other frozen material shall be removed before appropriate material is placed in the fill area.
3. The length of open trenches shall be limited to not more than 50 feet during active construction.
4. Each trench shall be backfilled to match the surrounding grade when construction activity ceases for any period of more than one hour.
5. Soil compaction shall be in accordance with the optimal moisture results of pertinent Proctor tests and shall conform to the approved plans and specifications.

6. Pipe installers shall abide by the manufacturers' cold weather guidelines, as well as the Uni-Bell Handbook of PVC Pipe, or an equivalent standard regarding the handling and installation of pipe, gaskets, fittings, etc.

The Public Works Department reserves judgment and authority to schedule or limit work near existing City utilities at their discretion.

A lack of compliance with these requirements may be cause for the Public Works Department to issue a stop work order or require work to be redone as a condition of final acceptance.

I, _____, as the Owner of the _____ project, hereby accept these requirements for cold weather construction of public infrastructure. I will enter into a separate two year warranty agreement with the City and understand the warranty period will start upon the City Engineer's written acceptance of the overall project. I will provide copies of this letter to my Engineer, _____ and Contractor, _____, immediately and direct them and their subcontractors to abide by these requirements, as well.

_____
Signature

_____
Printed Name

_____
Company Name

CITY OF WHITEFISH

DAILY CONSTRUCTION REPORT

Date _____

Project _____ Project No. _____

Client _____ Project Manager _____

Contractor _____

Weather _____ Temperature _____

Wind _____ Precipitation _____

AVERAGE FIELD OFFICE			
Name of Contractor	Prime or Subcontractor	No. of Men on Project	Remarks

ENGINEER'S PERSONNEL			
Time	Name	Duties	Remarks

EQUIPMENT AT THE SITE	

CONSTRUCTION ACTIVITIES

By: _____ Title _____ F:\admin\office\rpaforms\dacnsrpt.doc

REMARKS

REMARKS

DAILY PHOTOS

Items of Work Completed	Location or Sta. To Sta.	Amount	Remarks

APPENDIX F

Latecomers Agreement Application

LATE-COMERS AGREEMENT

THIS AGREEMENT is entered into as of the _____ day of _____, 20__, by and between the City of Whitefish, a municipal corporation ("CITY"), and _____ ("DEVELOPER") with respect to the following facts:

A. The CITY owns and operates a domestic water system and a sewage disposal and treatment system that serves properties within the City of Whitefish and on its periphery.

B. DEVELOPER has developed the property commonly known as _____ and, in connection therewith, has installed water and/or sewer mains, or other utility facilities, which will benefit properties in addition to those developed by DEVELOPER. The parties have identified certain expenses associated with such water and sewer improvements for which DEVELOPER seeks reimbursement from properties that may eventually use the utility facilities installed by DEVELOPER.

THEREFORE, THE PARTIES AGREE AS FOLLOWS:

1. Entitlement to Reimbursement. The CITY agrees that DEVELOPER has installed the following utility facilities for which the CITY's existing policies entitle the DEVELOPER to seek reimbursement from future customers who use such facilities:

a. Water Facilities: _____

_____

_____

Based on evidence and information submitted by DEVELOPER, the CITY agrees that the DEVELOPER shall be entitled to seek reimbursement, for the facilities described above in the amount of _____ DOLLARS as set forth further herein.

b. Sewer Facilities: _____

_____

_____

Based on evidence and information submitted by DEVELOPER, the CITY agrees that the DEVELOPER shall be entitled to seek reimbursement, for the facilities described above in the amount of _____ DOLLARS as set forth further herein.

2. Identification of Properties. The parties agree that the properties identified on Exhibit "A," attached hereto and incorporated herein by reference, are those properties from which DEVELOPER is entitled to seek reimbursement, and the reimbursement that DEVELOPER is entitled to seek is the amount set forth on Exhibit "A" with respect to each property and each utility.

3. City's Efforts to Collect. The CITY agrees that it shall exercise its best, good faith efforts to assist DEVELOPER in collecting reimbursement as set forth herein. The CITY will exercise its best, good faith efforts to decline to allow the properties described on Exhibit "A" to connect to any of the facilities for which DEVELOPER is entitled to seek reimbursement unless and until such properties have deposited with the CITY the appropriate amount of reimbursement, as described on Exhibit "A." Other than exercising its best, good faith efforts to obtain reimbursement from those properties listed on Exhibit "A," the CITY shall have no further obligation to police connections to the CITY's water and/or sewer system. The CITY shall not incur liability for any unauthorized connection to the CITY's water and/or sewer system, and the CITY shall not be obligated to pay to DEVELOPER any amount of reimbursement as set forth therein until the CITY has actually collected such amount from the properties described on Exhibit "A." DEVELOPER acknowledges that the CITY has entered into this Agreement as an accommodation and as a convenience to DEVELOPER, and the CITY does not guaranty that any amount of reimbursement will be collected for DEVELOPER; nor will the CITY be liable if it fails, through negligence or otherwise, to collect from a particular property.

4. Combination or Subdivision of Properties.

a. In the event that the number of properties identified on Exhibit "A" is reduced by the combining of one or more properties into a single property, the amount of reimbursement per property shall remain the same, and the total amount of reimbursement that DEVELOPER is entitled to, as set for in Section 1, shall be reduced accordingly. For example, if initially ten properties each owe $1,000.00 in reimbursement, and two properties are combined to form one, the nine remaining properties shall each owe $1,000.00, and the total reimbursement to which DEVELOPER is entitled shall be reduced to $9,000.00.

b. In the event that the number of properties identified on Exhibit "A" is increased, by the subdivision of one or more properties, the amount of a particular property's reimbursement shall be divided and spread equally over the number of subdivided lots that result, and the total amount of reimbursement that DEVELOPER is entitled to, as set forth in Section 1, shall remain the same. For example, if initially ten properties each owe $1,000.00 in reimbursement, and one property is subdivided into five subdivided lots, then each of the five subdivided lots shall owe $200.00, and the total reimbursement to which DEVELOPER is entitled shall remain $10,000.00. In no event shall the total amount of reimbursement to which DEVELOPER is entitled, as set forth in Section 1, be increased.

5. Payment to Developer. Within thirty (30) days of the CITY's collection of reimbursement from one of the property owners described on Exhibit "A," the CITY shall

remit such amount to the DEVELOPER, less a service charge equal to seven (7) percent of the amount collected (but in no event exceeding $100.00) to defray the CITY's costs of administering this Agreement.

6. Term; Incorporation of Policies. This Agreement shall be in effect for a period of ten (10) years, after which time it shall automatically terminate. DEVELOPER shall have no right to reimbursement from any properties described on Exhibit "A" that connect to the CITY's water and/or sewer system after the termination of this Agreement; nor shall the CITY have any further obligation to monitor or identify properties that connect after the termination of this Agreement. This Agreement incorporates by reference those policies of the CITY with respect to reimbursement of Developers that are in effect at the time of the execution of this Agreement.

7. Attorneys' Fees. In the event of any litigation to enforce or interpret the provisions of this Agreement, or to remedy a breach thereof, the prevailing party shall be entitled to reasonable attorneys' fees as fixed by the court.

8. Entire Agreement. This Agreement contains the entire agreement of the parties hereto, and supersedes any prior written or oral agreements between them concerning the subject matter contained herein. There are no representations, agreements, arrangements, or understandings, oral or written, between the parties hereto relating to the subject matter contained in this Agreement which are not fully expressed herein. The provisions of this Agreement may be waived, altered, amended or repealed in whole or in part only upon the written consent of all parties to this Agreement.

9. Governing Law. The construction of this Agreement, and the rights and liabilities of the parties hereto, shall be governed by the laws of the State of Montana.

10. Forum. Any litigation to enforce or interpret the provisions of this Agreement or the parties' rights and liabilities arising out of this Agreement or the performance hereunder shall be maintained only in the courts in the County of Flathead, Montana.

11. Successors in Interest. This Agreement shall inure to the benefit of, and shall be binding upon, the assigns, successors in interest, personal representatives, estate, heirs, and legatees of each of the parties hereto.

12. Notices. All notices, requests, payments, demands and other communications required or permitted to be given under this Agreement shall be in writing and shall either be delivered in writing personally or be sent by telegram or by regular or certified first-class mail, postage prepaid, deposited in the United States mail, and properly addressed to the party at his address set forth on the signature page of this Agreement, or at any other address that such party may designate by written notice to the other party.

Dated: _____

CITY OF WHITEFISH

By: _____

City Manager
CITY OF WHITEFISH
P. O. Box 158
Whitefish, Montana 59937

Dated: _____

DEVELOPER

By: _____

Address: _____

_____

APPENDIX G

Water and Sewer Material Specifications List

CITY OF WHITEFISH
WATER AND SEWER MATERIAL SPECIFICATIONS

WATER MAIN PIPE	6" thru 12" - PVC AWWA C-900 DR18 (formerly Class 150) 12" and larger - PVC AWWA C-905
GATE VALVES **MJ X MJ**	Mueller Resilient Wedge Gate Valve - 12" & under Mueller Butterfly - larger than 12"
TAPPING VALVES	Mueller Resilient Wedge Tapping Valve
TAPPING SLEEVES	Romac – Model SST III Mueller - Model H-304SS
VALVE BOXES	EJIW 8560 Series 3 pc. - Screw Type Tyler 6860 Series "DD" - Screw Type #6 Bases for Water - #4 Bases for Sewer Lids to be marked "WATER" or "SEWER"
ADJUSTABLE V.B. RISERS	Tyler 6860 - Screw Type, 67 - 69
MAIN COUPLINGS	Solid Sleeve - MJ SSB - Ductile Iron (Long) Class 350
MAIN FITTINGS	MJ SSB - Ductile Iron Class 350
JOINT RESTRAINT	MPWSS for Thrust Blocking (Megalug 2000 - on approval ONLY)
FIRE HYDRANTS	Mueller Super Centurion 250, 5-1/4", 3-way, MJ Shoe "RED" color
SEWER MAIN PIPE - GRAVITY	8" Minimum – PVC SDR 35
SEWER MAIN PIPE - PRESSURE	HDPE 200 psi – with butt fusion joints
SEWER SERVICE PIPE	**Gravity = SCH. 40 PVC Only.** Pressure = HDPE SDR 11 psi
SEWER SADDLES	Romac Saddle: CB-4.50 (For any main type) PVC Saddle: O-ring/gasket seal w/stainless steel clamps - (PVC main only)

WATER SERVICE PIPE	1. Type K Seamless Copper - ¾" to 2" 2. PE Pipe (IPS) SDR 7 - ¾" & 1" * 3. PE Tube (CTS) SDR 9 - 1½" & 2" * ***1. Toning wire required - see water service detail.*** ***2. Beveling tool must be used on IPS. Inserts on CTS.***
CURB STOPS	Mueller 300 Ball Curb Valves with Insta-Tite or compression fittings. SS liners are required for 110 compression fittings on PE pipe.
CURB BOXES	Mueller H-10314 or H-10334 Stationary rod required for all boxes
CORPORATION STOPS	¾" - 2" (CTS) Mueller B-25008 ¾" - 1" (IPS P.E.) Mueller B-25005
WATER SERVICE SADDLES	Romac Model 306 2" - 12" Romac Model 305 10" - 32"
METER WELLS	¾" & 1" - Mueller/ McCullough /Thermal - Coil Meter Box (Insulated w/cast iron lid & attached alum. bottom) *Meter wells for larger than 1" meters -* requires specific approval from the Public Works Department
BACKFLOW DEVICES	Devices must meet: The "Cross Connection Control Committee Pacific NW - Section AWWA - Cross Connection Manual" and/or The "Manual of Cross-Connection Control - University of Southern California – FCCHR".
STORM SEWER PIPE	12" minimum Material type & size as approved by the City Engineer
MANHOLE F/C	Olympic Foundry MH37A East Jordan Iron Works 3772
CURB INLET F/G	Olympic Foundry SM49B East Jordan Iron Works 7222
CATCH BASIN F/G	Olympic Foundry MH11 East Jordan Iron Works 3719

Printed On: 2/11/2009

APPENDIX H

Public Works Department Review Fee Information

Whitefish Public Works Department
Plan Review and Construction Oversight Fee
Calculation Worksheet

Please submit this completed form and payment along with infrastructure improvement plans and related documents to the Public Works Administrative Assistant.

Date: _____

Name of Project: _____

Consultant: _____ Project Manager: _____

Mailing Address: _____

Telephone: _____ Email: _____

Please provide the following information (leave the line blank if an item does not apply to your project).

a. Type of Development (check one and describe as indicated):
   - Subdivision ..... ___
     - Number of lots ___ - Major subdiv. if 6 or more lots
   - Multi-family residential - 6-plex and larger ..... ___
   - Commercial ..... ___
   - Other (i.e. simple water or sewer main extension) ..... ___
     - Description _____

b. Utility Extension Information
   - Length of new water main: _____ feet
   - Length of new sewer main: _____ feet

c. Does the project include water or sewer pumping facilities which will be owned by the City after construction? ___ yes ___ no

You may refer to the attached fee schedule and apply information from Items a, b, and c above to perform your own fee calculation. The Public Works Department will calculate fees as project documents are received.

A.	Base Plan	_____
B.	Water main extension	_____
	Sewer main extension	_____
C.	Pumping facilities	_____
	Total	_____

50% of the fee is due with the submittal of construction plans and related documents. The balance is due prior to the start of construction. Checks should be made payable to the City of Whitefish. Please review the attached fee schedule or contact the Public Works Department at 863-2460 for more information.

Last Revision March 12, 2004

Whitefish Public Works Department
Plan Review and Construction Oversight Fees

		Major Subdivision	Minor Subdivision	Multi-Family or Commercial Site
A.	Base Plan - site, streets, bike/ped facilities, drainage, lighting, etc.	$500 + $50 per lot	$300	$200
B.	Water and Sanitary Sewer Main Extensions (fee for each utility)	0 to 500 LF		$200
		More than 500 up to 2500 LF		$350
		More than 2500 LF		$450
C.	Water or Sewer Pumping Facilities (City owned and operated)	$400	$200	$200
D.	Independent Consultant Review (for specialized design features)	$150 + actual consultant fees		
E.	Additional Plan/Report Submittal and Review	$100 per additional submittal		

1 Fees for items A, B, and C are intended to cover City costs for 1 pre-design meeting, 2 final plan/document reviews, pre-construction and progress meetings, field inspection, warranty inspection and follow-up, record maintenance, and general administration.

2 For the purpose of this fee schedule, multi-family development is defined as a residential development project, other than a subdivision, including 6 or more dwelling units. A major subdivision is one which creates 6 or more lots.

3 Fees for stand-alone water or sanitary sewer main extension projects will be calculated using only Item B.

4 50% of fees calculated under items A, B, and C must be paid prior to start of final plan review.

5 The balance of fees calculated under items A, B, and C must be paid prior to the start of construction.

6 The need for independent consultant review will be determined by the Public Works Director and payment (Item D) is due prior to Public Works issuance of approval letter.

7 The review fee for additional submittals (Item E) is due prior to start of review for each additional submittal.

Last Revision Februry 17, 2004

APPENDIX I

GIS Control Points and Map

CITY OF WHITEFISH
GIS CONTROL POINTS

OWNERS: CITY OF WHITEFISH

PURPOSE: COORDINATE CONVERSION FOR WHITEFISH CITY GIS CONTROL POINTS

ROBERT PECCIA & ASSOCIATES
800 CLUTTER, SUITE 2B
KALISPELL, MT 59901 (406) 755-6481
FAX (406) 755-6488

1960 COOPERATIVE WAY, SUITE 200
KALISPELL, MT 59901 (406) 752-6625

FILENAME: CONVERSION.DWG DATE: DECEMBER, 2007 1 OF 1

1000 0 1000 2000
(SCALE IN FEET)

Basis of Bearings:
Grid North

Coordinates:
State Plane International Feet
Montana 2500, NAD83 (1999)

Elevations:
US Survey Feet Above MSL
NAVD88

LEGEND
- Control from original city survey (by Eby & Associates)
- Control from Montana Department of Transportation projects
- Control from local Robert Peccia & Associates projects

K:\Kal-Proj-Data\07124.000 - Whitefish GIS\07124.000-Proj\dwg\Survey\Conversion.dwg Dec 19, 2007

CITY OF WHITEFISH - GIS CONTROL POINTS

COORDINATES:

STATE PLANE INTERNATIONAL FEET
MONTANA 2500, NORTH AMERICAN DATUM 1983 (NAD83(1999))

ELEVATIONS:

US SURVEY FEET ABOVE MEAN SEA LEVEL (MSL)
NORTH AMERICAN VERTIVAL DATUM 1988 (NAVD88)

POINT NUMBER	NORTHING	EASTING	ELEVATION	POINT # ORIGINAL	MONUMENT DESCRIPTION
12710	1553127.279	794802.920	3035.54	MDT 127J	2" MDT ALUMINUM CAPS SET ON A 5/8" X 30" REBAR STAMPED WITH POINT NAME AND YEAR SET
12711	1553160.706	794453.333	3034.40	MDT 127K	2" MDT ALUMINUM CAPS SET ON A 5/8" X 30" REBAR STAMPED WITH POINT NAME AND YEAR SET
12712	1553169.884	794182.253	3031.95	MDT 127L	2" MDT ALUMINUM CAPS SET ON A 5/8" X 30" REBAR STAMPED WITH POINT NAME AND YEAR SET
12810	1553197.800	793834.938	3013.58	MDT 128J	2" MDT ALUMINUM CAPS SET ON A 5/8" X 30" REBAR STAMPED WITH POINT NAME AND YEAR SET
12811	1553166.538	793490.539	3013.87	MDT 128K	2" MDT ALUMINUM CAPS SET ON A 5/8" X 30" REBAR STAMPED WITH POINT NAME AND YEAR SET
12812	1553249.022	792836.784	3030.88	MDT 128L	2" MDT ALUMINUM CAPS SET ON A 5/8" X 30" REBAR STAMPED WITH POINT NAME AND YEAR SET
12813	1553281.727	792453.571	3030.87	MDT 128M	2" MDT ALUMINUM CAPS SET ON A 5/8" X 30" REBAR STAMPED WITH POINT NAME AND YEAR SET
12814	1553274.315	791874.094	3036.81	MDT 128N	2" MDT ALUMINUM CAPS SET ON A 5/8" X 30" REBAR STAMPED WITH POINT NAME AND YEAR SET
12815	1553377.290	791090.371	3044.02	MDT 128O	2" MDT ALUMINUM CAPS SET ON A 5/8" X 30" REBAR STAMPED WITH POINT NAME AND YEAR SET
12816	1553380.531	790300.338	3085.61	MDT 128P	2" MDT ALUMINUM CAPS SET ON A 5/8" X 30" REBAR STAMPED WITH POINT NAME AND YEAR SET
12817	1553455.771	789023.147	3084.60	MDT 128Q	2" MDT ALUMINUM CAPS SET ON A 5/8" X 30" REBAR STAMPED WITH POINT NAME AND YEAR SET
12904	1550807.136	784170.026	3304.57	MDT 129D	2" MDT ALUMINUM CAPS SET ON A 5/8" X 30" REBAR STAMPED WITH POINT NAME AND YEAR SET
12910	1553503.319	788160.261	3101.16	MDT 129J	2" MDT ALUMINUM CAPS SET ON A 5/8" X 30" REBAR STAMPED WITH POINT NAME AND YEAR SET
12911	1553502.961	787554.969	3101.15	MDT 129K	2" MDT ALUMINUM CAPS SET ON A 5/8" X 30" REBAR STAMPED WITH POINT NAME AND YEAR SET
12912	1553273.687	786849.271	3129.96	MDT 129L	2" MDT ALUMINUM CAPS SET ON A 5/8" X 30" REBAR STAMPED WITH POINT NAME AND YEAR SET
12913	1552298.283	785696.934	3183.73	MDT 129M	2" MDT ALUMINUM CAPS SET ON A 5/8" X 30" REBAR STAMPED WITH POINT NAME AND YEAR SET
12925	1553044.914	786415.459	3162.26	MDT 129Y	2" MDT ALUMINUM CAPS SET ON A 5/8" X 30" REBAR STAMPED WITH POINT NAME AND YEAR SET
13005	1551585.784	780091.536	3184.86	MDT 130E	2" MDT ALUMINUM CAPS SET ON A 5/8" X 30" REBAR STAMPED WITH POINT NAME AND YEAR SET
13010	1550541.335	783595.174	3307.74	MDT 130J	2" MDT ALUMINUM CAPS SET ON A 5/8" X 30" REBAR STAMPED WITH POINT NAME AND YEAR SET
13011	1551523.798	781287.900	3177.30	MDT 130K	2" MDT ALUMINUM CAPS SET ON A 5/8" X 30" REBAR STAMPED WITH POINT NAME AND YEAR SET
13023	1550350.121	783368.445	3290.96	MDT 130W	2" MDT ALUMINUM CAPS SET ON A 5/8" X 30" REBAR STAMPED WITH POINT NAME AND YEAR SET
13024	1550401.194	782514.419	3233.73	MDT 130X	2" MDT ALUMINUM CAPS SET ON A 5/8" X 30" REBAR STAMPED WITH POINT NAME AND YEAR SET
13025	1551258.401	781857.219	3202.55	MDT 130Y	2" MDT ALUMINUM CAPS SET ON A 5/8" X 30" REBAR STAMPED WITH POINT NAME AND YEAR SET
13110	1551549.565	778900.567	3182.15	MDT 131J	2" MDT ALUMINUM CAPS SET ON A 5/8" X 30" REBAR STAMPED WITH POINT NAME AND YEAR SET
13111	1550488.705	776072.709	3109.59	MDT 131K	2" MDT ALUMINUM CAPS SET ON A 5/8" X 30" REBAR STAMPED WITH POINT NAME AND YEAR SET
13112	1549977.551	774574.180	3118.50	MDT 131L	2" MDT ALUMINUM CAPS SET ON A 5/8" X 30" REBAR STAMPED WITH POINT NAME AND YEAR SET
13124	1551634.903	777924.617	3156.78	MDT 131X	2" MDT ALUMINUM CAPS SET ON A 5/8" X 30" REBAR STAMPED WITH POINT NAME AND YEAR SET
13125	1551455.294	777046.203	3143.46	MDT 131Y	2" MDT ALUMINUM CAPS SET ON A 5/8" X 30" REBAR STAMPED WITH POINT NAME AND YEAR SET
13126	1550041.955	775042.651	3110.49	MDT 131Z	2" MDT ALUMINUM CAPS SET ON A 5/8" X 30" REBAR STAMPED WITH POINT NAME AND YEAR SET
13202	1549037.766	772578.415	3099.20	MDT 132B	2" MDT ALUMINUM CAPS SET ON A 5/8" X 30" REBAR STAMPED WITH POINT NAME AND YEAR SET
13203	1549120.226	772000.978	3069.03	MDT 132C	2" MDT ALUMINUM CAPS SET ON A 5/8" X 30" REBAR STAMPED WITH POINT NAME AND YEAR SET
13310	1550364.954	768899.950	3022.91	MDT 133J	2" MDT ALUMINUM CAPS SET ON A 5/8" X 30" REBAR STAMPED WITH POINT NAME AND YEAR SET
50104	1549427.960	794910.577	3033.85	MDT D501	NGS BRASS DISC
50106	1553470.230	789811.867	3087.68	MDT F501	NGS BRASS DISC
50107	1551707.646	785009.964	3217.20	MDT G501	NGS BRASS DISC
50110	1551608.399	778562.065	3182.19	MDT J501	NGS BRASS DISC
50111	1549717.438	773727.294	3114.33	MDT K501	NGS BRASS DISC
50112	1550204.167	769536.281	3018.91	MDT L501	NGS BRASS DISC
50116	1563281.178	761864.380	3041.74	MDT P501	NGS BRASS DISC
620	1549921.736	770223.863	3018.39	MDT T-6	5/8" REBAR WITH MDOT ALUMINUM CONTROL CAP STAMPED "T-6 1992"

10001	1562703.118	796926.339	3236.43	EBY 1	3.25" EBY AC
10002	1551322.963	786661.390	3433.79	EBY 2	3.25" EBY AC
10003	1546356.553	797769.914	3035.21	EBY 3	5/8" REBAR
10004	1547285.783	793044.062	3091.88	EBY 4	5/8" REBAR
10005	1552343.977	801953.944	3052.08	EBY 5	5/8" REBAR
10006	1563868.692	792882.993	3087.41	EBY 6	5/8" REBAR
10007	1564031.859	791240.402	3107.60	EBY 7	5/8" REBAR
10008	1561393.717	793960.936	3000.95	EBY 8	5/8" REBAR
10009	1559956.560	794242.013	3006.02	EBY 9	5/8" REBAR
10010	1557276.507	791955.048	3000.04	EBY 10	5/8" REBAR
10011	1555902.655	793303.334	3043.57	EBY 11	MAGNAIL
10012	1555629.251	797148.627	3054.49	EBY 12	5/8" REBAR
10013	1555486.129	799816.409	3046.57	EBY 13	5/8" REBAR
10014	1553859.315	804650.051	3079.26	EBY 14	MAGNAIL
10015	1551519.337	799517.791	3068.30	EBY 15	1.25 YPC C4
10016	1551374.729	801803.700	3059.91	EBY 16	MAGNAIL
10017	1554878.060	789686.045	3036.35	EBY 17	5/8" REBAR
10018	1559135.042	786640.660	3003.26	EBY 18	5/8" REBAR
10019	1556426.907	786390.806	3093.88	EBY 19	5/8" REBAR
10020	1546249.144	803698.029	3055.42	EBY 20	5/8" REBAR
10021	1546151.908	799911.289	3028.05	EBY 21	5/8" REBAR
10022	1542100.355	801737.812	3036.87	EBY 22	5/8" REBAR
10023	1537892.838	803509.385	3045.01	EBY 23	5/8" REBAR
10024	1538264.878	799799.367	3039.00	EBY 24	5/8" REBAR
10025	1542628.315	798988.014	3029.61	EBY 25	5/8" REBAR
10026	1540520.338	796608.070	3060.75	EBY 26	5/8" REBAR
10027	1538519.769	796896.219	3079.92	EBY 27	5/8" REBAR
10028	1540602.558	792263.441	3168.55	EBY 28	5/8" REBAR
10029	1540713.618	789179.725	3125.65	EBY 29	5/8" REBAR
10030	1546963.587	790692.351	3141.84	EBY 30	5/8" REBAR
10031	1549738.005	789223.797	3150.51	EBY 31	5/8" REBAR
10032	1551287.889	792870.236	3041.84	EBY 32	MAGNAIL
10033	1550724.411	795390.674	3035.82	EBY 33	1.25" RPC
10034	1549793.305	785700.966	3199.22	EBY 34	5/8" REBAR
10035	1552037.177	786252.900	3244.67	EBY 35	5/8" REBAR
10036	1561079.440	797653.063	3103.05	EBY 36	5/8" REBAR
10038	1552078.758	797564.167	3033.82	EBY 38	SPIKE IN PAVEMENT
10039	1552143.825	797498.815	3034.70	EBY 39	WHITEFISH 1959
10040	1546817.023	796936.319	3033.59	EBY 40	5/8" REBAR
10101	1538286.246	799989.972	3035.89	EBY 101	NGS BRASS DISC "L509"
11005	1555093.520	793933.719	3039.95	MDT 0E	2" MDT ALUMINUM CAPS SET ON A 5/8" X 30" REBAR STAMPED WITH POINT NAME AND YEAR SET
11006	1556639.358	793980.743	3051.46	MDT 0F	2" MDT ALUMINUM CAPS SET ON A 5/8" X 30" REBAR STAMPED WITH POINT NAME AND YEAR SET
11101	1558212.815	794073.121	3060.51	MDT 1A	2" MDT ALUMINUM CAPS SET ON A 5/8" X 30" REBAR STAMPED WITH POINT NAME AND YEAR SET
11102	1559067.102	794125.147	3043.51	MDT 1B	2" MDT ALUMINUM CAPS SET ON A 5/8" X 30" REBAR STAMPED WITH POINT NAME AND YEAR SET
11201	1560583.946	794212.842	3009.04	MDT 2A	2" MDT ALUMINUM CAPS SET ON A 5/8" X 30" REBAR STAMPED WITH POINT NAME AND YEAR SET
11202	1562059.338	794291.430	3020.24	MDT 2B	2" MDT ALUMINUM CAPS SET ON A 5/8" X 30" REBAR STAMPED WITH POINT NAME AND YEAR SET
11203	1562834.777	794338.813	3035.55	MDT 2C	2" MDT ALUMINUM CAPS SET ON A 5/8" X 30" REBAR STAMPED WITH POINT NAME AND YEAR SET
11301	1563699.266	793744.532	3096.15	MDT 3A	2" MDT ALUMINUM CAPS SET ON A 5/8" X 30" REBAR STAMPED WITH POINT NAME AND YEAR SET
11302	1563802.969	793144.403	3082.63	MDT 3B	2" MDT ALUMINUM CAPS SET ON A 5/8" X 30" REBAR STAMPED WITH POINT NAME AND YEAR SET
11303	1563920.504	791406.918	3107.82	MDT 3C	2" MDT ALUMINUM CAPS SET ON A 5/8" X 30" REBAR STAMPED WITH POINT NAME AND YEAR SET
11401	1564326.993	790828.273	3115.48	MDT 4A	2" MDT ALUMINUM CAPS SET ON A 5/8" X 30" REBAR STAMPED WITH POINT NAME AND YEAR SET
11402	1565069.989	790641.155	3121.78	MDT 4B	2" MDT ALUMINUM CAPS SET ON A 5/8" X 30" REBAR STAMPED WITH POINT NAME AND YEAR SET
11403	1565810.049	790547.977	3126.76	MDT 4C	2" MDT ALUMINUM CAPS SET ON A 5/8" X 30" REBAR STAMPED WITH POINT NAME AND YEAR SET

30022	1552991.264	792884.042	3017.92	6TH 22	5/8" REBAR WITH RED PLASTIC CAP "RPA CONTROL"
30023	1552859.333	792717.708	3029.53	6TH 23	5/8" REBAR WITH RED PLASTIC CAP "RPA CONTROL"
30024	1552495.315	792727.587	3029.59	6TH 24	5/8" REBAR WITH RED PLASTIC CAP "RPA CONTROL"
30025	1552168.547	792918.422	3037.45	6TH 25	5/8" REBAR WITH RED PLASTIC CAP "RPA CONTROL"
30026	1551922.197	792878.327	3039.67	6TH 26	MAGNAIL
30027	1551879.426	793287.740	3032.82	6TH 27	5/8" REBAR WITH RED PLASTIC CAP "RPA CONTROL"
30028	1551611.866	793264.495	3019.40	6TH 28	5/8" REBAR WITH RED PLASTIC CAP "RPA CONTROL"
30029	1551561.107	793612.204	3007.66	6TH 29	MAGNAIL
30030	1551407.822	794018.775	3027.33	6TH 30	5/8" REBAR WITH RED PLASTIC CAP "RPA CONTROL"
30031	1551424.875	794413.444	3016.05	6TH 31	5/8" REBAR WITH RED PLASTIC CAP "RPA CONTROL"
31001	1552420.923	798575.114	3020.14	EASTSIDE 1	5/8" REBAR WITH RED PLASTIC CAP "RPA CONTROL"
31002	1552893.991	798578.270	3029.44	EASTSIDE 2	5/8" REBAR WITH RED PLASTIC CAP "RPA CONTROL"
31003	1553083.834	798394.283	3022.34	EASTSIDE 3	5/8" REBAR WITH RED PLASTIC CAP "RPA CONTROL"
31004	1553186.294	798373.637	3021.62	EASTSIDE 4	5/8" REBAR WITH RED PLASTIC CAP "RPA CONTROL"
31005	1553375.896	798394.398	3038.25	EASTSIDE 5	5/8" REBAR WITH RED PLASTIC CAP "RPA CONTROL"
31006	1553685.684	798378.482	3024.11	EASTSIDE 6	5/8" REBAR WITH RED PLASTIC CAP "RPA CONTROL"
31007	1553868.989	798453.150	3047.06	EASTSIDE 7	5/8" REBAR WITH RED PLASTIC CAP "RPA CONTROL"
31008	1554082.938	798437.919	3046.88	EASTSIDE 8	5/8" REBAR WITH RED PLASTIC CAP "RPA CONTROL"
31009	1554222.487	798454.314	3033.39	EASTSIDE 9	5/8" REBAR WITH RED PLASTIC CAP "RPA CONTROL"
31010	1553442.706	798641.209	3042.63	EASTSIDE 10	5/8" REBAR WITH RED PLASTIC CAP "RPA CONTROL"
31011	1552876.035	798294.686	3027.02	EASTSIDE 11	5/8" REBAR WITH RED PLASTIC CAP "RPA CONTROL"
31012	1552868.441	798945.724	3045.06	EASTSIDE 12	5/8" REBAR WITH RED PLASTIC CAP "RPA CONTROL"
31013	1552027.113	798958.773	3040.20	EASTSIDE 13	5/8" REBAR WITH RED PLASTIC CAP "RPA CONTROL"
31014	1551527.066	799101.554	3044.53	EASTSIDE 14	5/8" REBAR WITH RED PLASTIC CAP "RPA CONTROL"

APPENDIX J

Weekly Inspection Summary Reports

CONSTRUCTION PROGRESS AND INSPECTION REPORT

Period Ending
Date, 2007

Project Name
Project, Whitefish, MT

Project Description	Contractor's Name
Excavation, Water Line, Sewer Line, Storm Drain, Paving and Sidewalk Construction	**Construction Company, Inc.** **Kalispell, MT**

1. Rough Estimate of Percent Completion to Date of Construction Phases *(Include items such as clearing, grading, drainage, base, surface, lighting, etc.)*

2. Work Completed or in Progress this period

3. Brief Weather Summary This Period Including Approximate Rainfall and Periods of Below Freezing Temperature
(On earthwork jobs include soil conditions)

4. Contract Time

No Days Charged To Date	Last Working Day Charged (Date)

5. Summary of Laboratory and Field Testing This Period *(note failing tests and any retests Summarize out-of-tolerance material. Identify material subject to pay reduction.)*

6. Describe Anticipated Work by Contractor for Next Period

7. Problem Areas/Other Comments *(Revisions to plans and specifications approved or denied, delays, difficulties, etc. and actions taken.)*

SPONSOR'S INSPECTOR OR REPRESENTATIVE

Date	Typed of Printed Name and Title	Signature

APPENDIX K

Pre-construction Meeting Checklist

PRECONSTRUCTION CONFERENCE AGENDA

Project Name:

Project Number:

Date: Time:

Location:

Attendees: *(Sign in on sheet)*

Discussion

1. Project Organization:

Owner: _____

_____

Engineer: _____

_____

Contractor: _____

_____

Subcontractors: _____

_____

_____

Utility Company Representatives:

Gas: _____

Electric: _____

Telephone: _____

Cable TV: _____

2. Purpose of Meeting

- ☐ Introduce and designate responsible personnel
- ☐ Establish working relationship
- ☐ Discuss project requirements
- ☐ Coordination with Utility Companies

3. Contractor's Tentative Schedule

Contract Time:
Start Date:
Completion Date:
Normal Work Week:

4. **Contractor's Submittals**
   - ☐ Construction Schedules
   - ☐ Traffic Plan
   - ☐ Other Technical Specification sections
   - ☐ Substitutions

5. **Applications for Payment**
   - ☐ Review of General Conditions
   - ☐ Review of Measurement and Payment
   - ☐ Materials on site

6. **Specific Requirements and Procedures**
   - ☐ Traffic Control
   - ☐ Adjacent Construction Activities
   - ☐ Certified payrolls
   - ☐ Temporary Construction Permits

7. **Critical Work Sequencing**
   - ☐ Material ordering and delivery
   - ☐ Utility Companies related work

8. **Field Decisions, Work Directives, and Change Orders**
   - ☐ Review of General Conditions

9. **Use of Premises, Storage Areas, Security, Field Office**

10. **Contractor's Assignments for Safety and First Aid**
    - ☐ Review Safety Standards

11. **Progress Meetings**

12. **Inspection and Testing**
    - ☐ Review Special Provisions No. 7

13. **Comments by Other Representatives**
    - ☐ Owner's Representative
    - ☐ Utility Companies

K:\Kal-Proj-Data\PROPOSALS\City of WF\Design Stds Update\PRECON_AGEN.DOC

APPENDIX L

Runoff Intensity – Duration – Frequency Chart

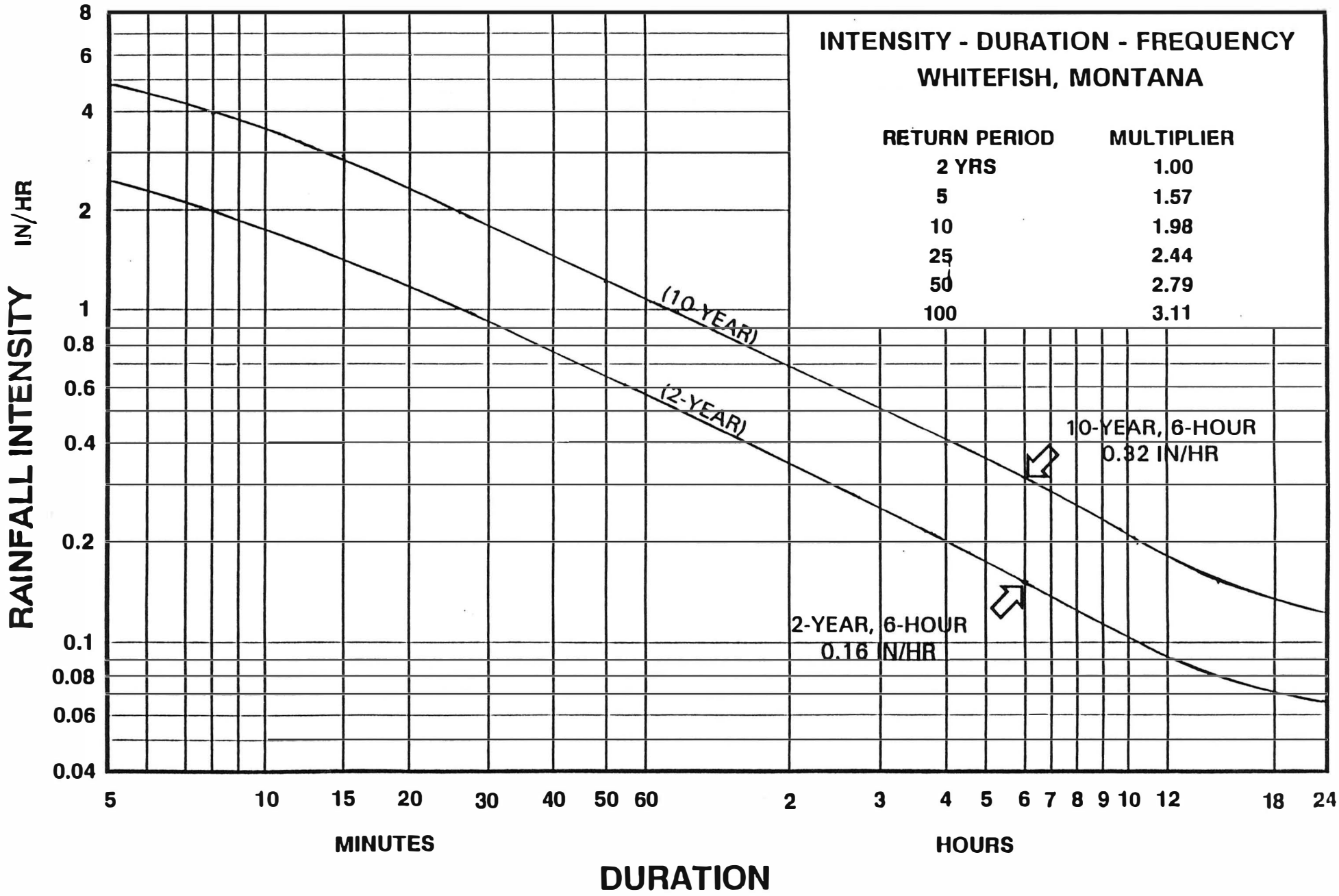
INTENSITY - DURATION - FREQUENCY
WHITEFISH, MONTANA
RETURN PERIOD MULTIPLIER
2 YRS 1.00
5 1.57
10 1.98
25 2.44
50 2.79
100 3.11
(10-YEAR)
(2-YEAR)
10-YEAR, 6-HOUR
0.32 IN/HR
2-YEAR, 6-HOUR
0.16 IN/HR
RAINFALL INTENSITY IN/HR
8
6
4
2
1
0.8
0.6
0.4
0.2
0.1
0.08
0.06
0.04
5 10 15 20 30 40 50 60 2 3 4 5 6 7 8 9 10 12 18 24
MINUTES
HOURS
DURATION

APPENDIX M

Municipal Facilities Exclusion Checklist Form (MFE)

MUNICIPAL FACILITIES EXCLUSION CHECKLIST

CERTIFICATION OF THE AVAILABILITY OF MUNICIPAL SERVICES

In accordance with ARM 17.36.602, the following information is provided to the Department of Environmental Quality for their consideration of the subdivision:

1. Name of Subdivision:

2. Location of Subdivision: (See attached location map)

   _____¼ _____¼ Section _____ Township ___ Range

3. Name and Address of Applicant:

4. A copy of the _____ certificate of survey is attached
   _____ preliminary plat is attached.
   _____ final plat is attached.

5. Name and Address of Individual(s) of Firm to whom correspondence is to be sent:

   _____

   _____

   _____

6. Location of the subdivision to the city or town, vicinity map attached: Yes ___ No ___

7. Number of parcels in this subdivision:

8. This property is within a Whitefish _____ zone. A copy of that section of the zoning ordinance is attached.

9. The City of Whitefish hereby certifies that adequate municipal facilities are available (or will be within one year) to provide the following services to the subdivision:

Water	_____ Yes	_____ No
Sewer Disposal	_____ Yes	_____ No
Solid Waste Disposal	_____ Yes	_____ No
Storm Sewer	_____ Yes	_____ No

10. Method of financing extension of water and/or sewer mains:

_____A water main already exists in the right-of-way adjacent to this subdivision; no extension of water main is required. The property owner will bear the cost of water service line installation.

_____ A water main extension is required. The cost of the extension will be financed by:

____ A sewer main already exists in the right-of-way adjacent to this subdivision; no extension of sewer main is required. The property owner will bear the cost of sewer service line installation.

_____ A sewer main extension is required. The cost of the extension will be financed by:

11. Will the owner of the municipal facilities own, operate and maintain the water supply, and sewage disposal facilities? Yes ____ No ____

12. Will the owner of the municipal facilities own, operate and maintain the solid waste facilities? Yes ____ No ____
If not will there be service available for disposal of solid waste to the Flathead County landfill? Yes ____ No ____

13. Will the owner of the municipal facilities own, operate and maintain the storm water facilities? Yes ____ No ____ If not, explain how maintenance of the facilities will be addressed.

14. Will all water and sewer mains or extensions as defined in 76-4-102, MCA, be under the control and maintenance of the certifying municipality? Yes ____ No ____

15. Exclusion Checklist review fee, $75, included: Yes ____ No _____

16. I certify that the governing body has reviewed and approved storm water drainage plans to ensure that adequate drainage is provided.

17. (Other):

Certified by: _____ Date:
City Engineer

Send with the $75 review fee to:

Montana Department of Environmental Quality
Subdivision Review Section/Water Protection Bureau
Permitting and Compliance Division
PO Box 200901
Helena, MT 59620

APPENDIX N

Traffic Calming Measures

Table 7-1 Types of Traffic Calming Measures

Vertical Deflection

Measure	Definition/Application	Advantages	Disadvantages	Special Considerations
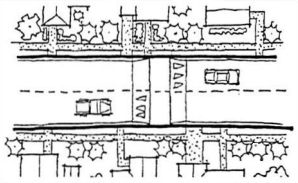 Speed Hump	Paved hump in the street that causes discomfort at high speeds. • Speed reduction • Possible traffic reduction	• Effective if used in series at 300 to 500 foot spacing. • Self-enforcing. • Relatively inexpensive.	• If not properly designed, drivers may skirt around to reduce impact. • Drivers may speed up between humps. • May increase volumes on other streets. • Difficult to properly construct.	• Emergency vehicles • Drainage • Signage • Snow removal Estimated Cost Range = $1,000 to $2,000
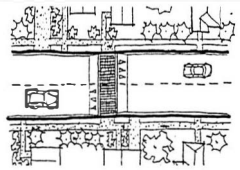 Raised Crosswalk	Speed hump designed as a pedestrian crossing. • Speed reduction at crossing • Possible traffic reduction	• Highlights crosswalk. • Excellent pedestrian safe treatment. • Aesthetically pleasing if designed. • Relatively inexpensive.	• Drivers may speed up between humps. • May increase volumes on other streets. • Difficult to properly construct.	• Emergency vehicles • Drainage • Signage • Snow removal Estimated Cost Range = $1,000 to $2,000
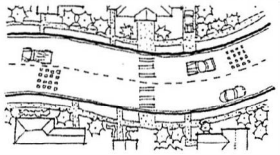 Rumble Strips	Patterned sections of rough pavement. • Possible speed reduction	• Relatively inexpensive to install. • Create driver awareness.	• High maintenance. • May adversely impact bicyclists. • Noisy by design, and not recommended for all areas.	• Emergency vehicles Estimated Cost Range = $1,000 to $2,000
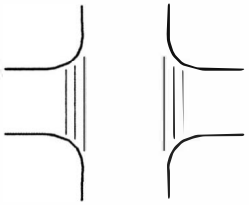 Surface Valley Gutters	Dips in the street that can be used to carry run-off as well as cause discomfort to drivers at high speeds. • Speed reduction • Possible traffic reduction	• Effective if used in series at 300 to 500 foot spacing. • Self-enforcing. • Relatively inexpensive during initial construction.	• Drivers may speed up between dips. • May increase volumes on other streets. • Not usually appropriate for existing streets with established drainage patterns.	• Emergency vehicles • Drainage • Signage Estimated Cost Range = $1,000 to $2,000

Vertical Deflection

Measure	Definition/Application	Advantages	Disadvantages	Special Considerations
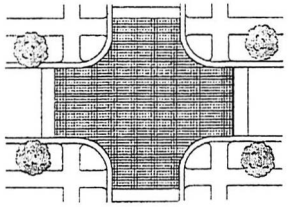 Raised Intersection	Raised plateau where streets intersect. • Speed reduction • Possible traffic reduction	• Slows vehicles in the most critical area, reducing conflict. • Highlights intersection. • Excellent pedestrian safety treatment. • Aesthetically pleasing if well designed. • Better for emergency vehicles than speed humps.	• Increases difficulty of making a turn. • Increased maintenance. • Requires adequate signage and driver education.	• Emergency vehicles • Drainage • Signage • Snow removal Estimated Cost Range = $4,000 to $6,000

Horizontal Deflection

Measure	Definition/Application	Advantages	Disadvantages	Special Considerations
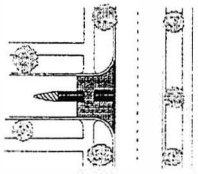 Gateway Treatment	Entry treatment that communicates a sense of neighborhood identity and a change in traffic conditions. • Speed reduction at entry • Traffic reduction	• Positive indication of a change in environment from arterial road to residential street. • Reduces pedestrian crossing distances. • On wide streets, provides space for landscaping in the median.	• Low speed of turning vehicles may restrict flow on adjacent arterial.	• Emergency vehicle access • Lighting • Irrigation and maintenance of landscaping Estimated Cost Range = $5,000 to $25,000
Single-Lane Slow Point/ 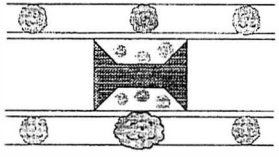 Lane Narrowing	Mid-block expansion of landscaped areas and/or on-street parking in order to physically narrow the street to a single traffic lane. • Speed Reduction • Traffic Reduction	• Minor inconvenience to drivers. • Minimal inconvenience to local traffic. • Shorter crossing distance for pedestrians. • Provides space for landscaping. • Effective when used in series.	• Unfriendly to bicyclists unless designed to accommodate them. • Conflict between opposing drivers arriving simultaneously could create problems. • Contrary to driver expectation of unobstructed flow.	• Emergency vehicle access • Lighting • Signage • Irrigation and maintenance of landscaping Estimated Cost Range = $8,000 to $20,000

Horizontal Deflection

Measure	Definition/Application	Advantages	Disadvantages	Special Considerations
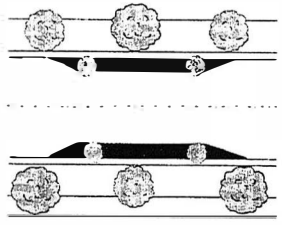 Two-Lane Slow Point	Mid-block expansion of landscaped areas and/or on-street parking in order to physically narrow the street. • Speed reduction • Possible traffic reduction	• Minor inconvenience to drivers. • Regulates parking if bulb-outs are placed in no parking zones. • Protects parked vehicles. • Reduces pedestrian crossing distance. • Provides space for landscaping.	• Less effective in reducing speed and diverting traffic than the single-lane application. • Unfriendly to bicyclists unless designed to accommodate them.	• Lighting • Signage • Irrigation and maintenance of landscaping Estimated Cost Range = $8,000 to $20,000
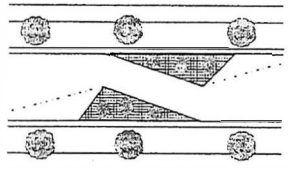 Single-Lane Angled Slow Point	Offset curb extensions used to narrow the street to a single lane and create angled deviations in the path of travel. • Speed reduction • Traffic reduction	• Minor inconvenience to drivers. • Minimal inconvenience to local traffic. • Shorter crossing distance for pedestrians. • Provides space for landscaping. • Effective when used in series.	• Unfriendly to bicyclists unless designed to accommodate them. • Conflict between opposing drivers arriving simultaneously could create problems. • Contrary to driver expectation of unobstructed flow.	• Emergency vehicle access • Lighting • Signage • Irrigation and maintenance of landscaping Estimated Cost Range = $8,000 to $20,000
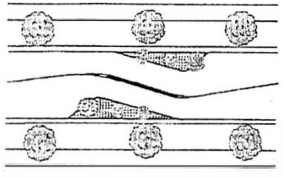 Two-Lane Angled Slow Point	Offset curb extensions used to narrow the street and create angled deviations in the path of travel. • Speed reduction • Possible traffic reduction	• Same as Single-Lane Angled Slow Point, except pedestrian safety is reduced.	• Same as Single-Lane Angled Slow Point, except less effective in controlling speeds because drivers can create a straighter through movement by driving over centerline.	• Lighting • Signage • Irrigation and maintenance of landscaping Estimated Cost Range = $8,000 to $20,000

Horizontal Deflection

Measure	Definition/Application	Advantages	Disadvantages	Special Considerations
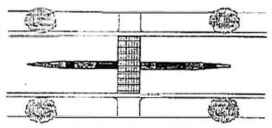 Mid-Block Median	Island or barrier in the center of a street that narrows lanes and segregates traffic. • Possible speed reduction • Possible traffic reduction	• Provides a refuge for pedestrians and bicyclists. • Can improve the streetscape if landscaped.	• Limited reduction in vehicle speeds.	• Lighting • Signage • Irrigation and maintenance of landscaping Estimated Cost Range = $5,000 to $10,000
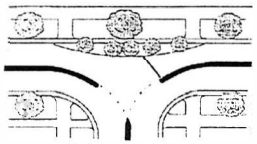 Modified "T" Intersection	Modification of "T" intersection layout which gives priority to turning traffic. • Speed reduction • Possible traffic reduction	• Reduces through traffic along the top of the "T". • May provide space for landscaping.	• Can cause confusion regarding priority movements, which may lead to accidents.	• Lighting • Signage • Irrigation and maintenance of landscaping Estimated Cost Range = $5,000 to $10,000
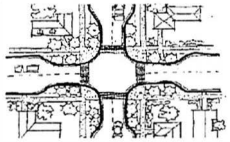 Neckdown/Curb Bulbs	Physical curb reduction of road width at an intersection. • Speed reduction	• Reduces pedestrian crossing distance. • Can be used in multiple applications or on a single segment of roadway. • Aesthetically pleasing if landscaped.	• Unfriendly to bicyclists unless designed to accommodate them. • Landscaping may cause sight line problems.	• Lighting • Signage • Irrigation and maintenance of landscaping Estimated Cost Range = $20,000 to $30,000
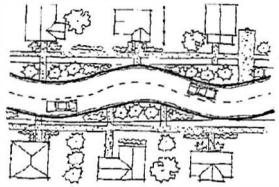 Deviation/Chicanes	Offset curb extensions that cause deviation in the path of travel. • Speed reduction • Possible traffic reduction	• Imposes minimal inconvenience on local traffic. • Reduces pedestrian crossing distance. • Provides large area for landscaping. • Reduces speed without significantly increasing emergency response time. • Aesthetically pleasing.	• May create opportunities for head-on conflicts on narrow streets. • Cost is greater than many other devices. • Unfriendly to bicyclists unless designed to accommodate them.	• Lighting • Signage • Irrigation and maintenance of landscaping Estimated Cost Range = $20,000 to $30,000

Horizontal Deflection

Measure	Definition/Application	Advantages	Disadvantages	Special Considerations
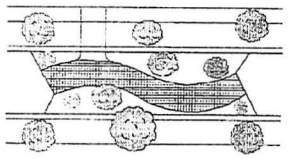 Driveway Link	Narrow winding driveway section placed between two standard street segments. • Speed reduction • Traffic reduction	• Changes the initial impression of the street. Appears to be a road closure yet allows through movements for local traffic. • Provides a large area for landscaping.	• High cost can be prohibitive. Best installed in conjunction with street reconstruction or initial construction. • Unfriendly to bicyclists unless designed to accommodate them.	• Emergency vehicle access • Lighting • Signage • Irrigation and maintenance of landscaping Estimated Cost Range = $20,000 to $50,000
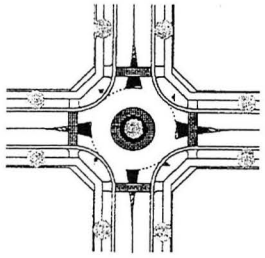 Traffic Circle/Roundabout	Raised circular area placed in the center of an intersection. Drivers travel in a counter-clockwise direction and are required to yield upon entry. • Speed reduction at intersection • Possible traffic reduction	• Reduces accidents by 50% to 90% over stop control. • Provides space for landscaping. • Cheaper to maintain than signals. • Effective at multi-leg intersections. • Provides equal access to intersections for all drivers. • Provides a good environment for bicyclists.	• May be restrictive for larger vehicles if designed to a low speed. (This can be minimized by the use of a mountable apron.) • Right of way may need to be purchased to accommodate left turns by large vehicles. • Initial safety issues as drivers adjust. • May increase volumes on adjacent streets.	• Lighting • Signage • Irrigation and maintenance of landscaping Estimated Cost Range = $10,000 to $50,000
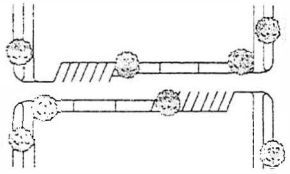 Shared Zone	A block with narrow entry points and high-density parking which functions similarly to a parking lot. • Speed reduction • Traffic reduction	• Provides a low speed shared environment that is safe for all users. • Improves amenity without restricting access. • Provides flexibility for on-street parking.	• High cost unless part of original design. • May result in an increased number of low speed accidents.	• Emergency vehicle access • Signage Estimated Cost Range = $15,000 to $25,000

Obstruction

Measure	Definition/Application	Advantages	Disadvantages	Special Considerations
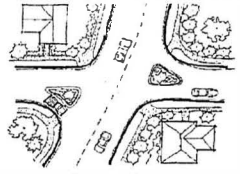 Forced Turn Barriers/ Diverters	Small traffic islands installed at intersections to restrict and channelize turning movements. • Traffic reduction • Possible speed reduction	• Changes driving patterns • May reduce cut through traffic. • May be attractive if landscaped.	• May increase trip length for some drivers. • May increase response times for emergency vehicles.	• Lighting • Signage • Irrigation and maintenance of landscaping Estimated Cost Range = $4,000 to $8,000
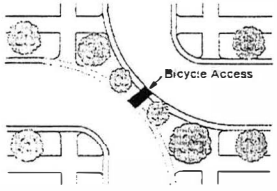 Diagonal Road Closure	Barrier placed diagonally across a four-legged intersection, interrupting traffic flow across the intersection. • Traffic reduction • Speed reduction	• Eliminates through traffic • Provides area for landscaping. • Reduces traffic conflict points. • Increases pedestrian safety • Can include bicycle path connection.	• May inconvenience residents gaining access to their properties. • May inhibit access by emergency vehicles. • May divert through traffic to other local streets. • Altered traffic patterns may increase trip length.	• Lighting • Signage • Irrigation and maintenance of landscaping Estimated Cost Range = $10.000 to $20,000
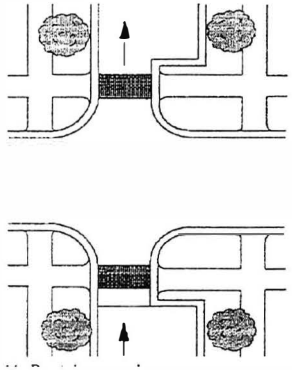 Partial Street Closure	Blockage of one direction of traffic on a two-way street. The open lane of traffic is signed one-way, and traffic from the blocked lane is not allowed to drive around the barrier in the open lane. • Traffic reduction • Speed reduction	• Reduces through traffic in one direction. • Allows two-way traffic on the remainder of the street. • Shorter crossing distance for pedestrians. • Provides space for landscaping. • Two-way bicycle access can be maintained. • Emergency vehicles can drive around partial closure with care.	• Reduces access for residents. • Compliance with semi-diverters is not 100%. • May increase trip length.	• Lighting • Signage • Irrigation and maintenance of landscaping Estimated Cost Range = $10,000 to $20,000 each side of intersection

Obstruction

Measure	Definition/Application	Advantages	Disadvantages	Special Considerations
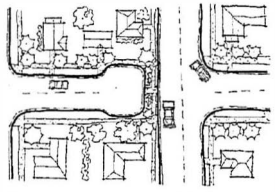 Cul-De-Sac/Street Closure	Street closed to motor vehicles at the end of a block using planters, bollards, barriers, etc. • Traffic reduction • Speed reduction	• Eliminates through traffic. • Improves safety for all street users. • Pedestrian and bicycle access maintained.	• Reduces emergency vehicle access. • Reduces access to properties for residents. • May increase trip lengths. • May increase volumes on other streets.	• Emergency vehicle access • Lighting • Signage • Irrigation and maintenance of landscaping Estimated Cost Range = $15,000 to $25,000
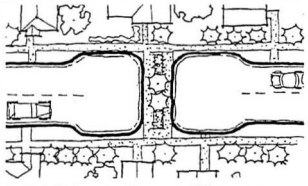 Mid-Block Street Closure	Street closed to motor vehicles mid-block using planters, bollards, barriers, etc. • Traffic reduction • Speed reduction	• Eliminates through traffic. • Improves safety for all street users. • Pedestrian and bicycle access maintained.	• Reduces emergency vehicle access. • Reduces access to properties for residents. • May increase trip lengths. • May increase volumes on other streets.	• Emergency vehicle access • Lighting • Signage • Irrigation and maintenance of landscaping Estimated Cost Range = $15,000 to $25,000
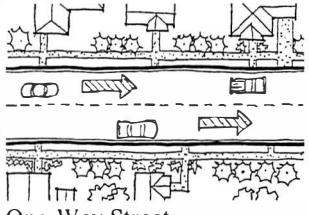 One-Way Street	Street upon which motor vehicles may operate in just one direction. • Possible traffic reduction	• Increased safety due to lack of opposing traffic. • Can be used to open up more resident parking. • Maintains reasonable access for emergency vehicles. • Can discourage through traffic.	• Can lead to increased vehicle speeds. • May increase trip lengths. • May increase volumes on other streets. • Initial safety concerns as drivers adjust. • Alternative route must exist.	• Signage Estimated Cost Range = $2,000 to $3,000
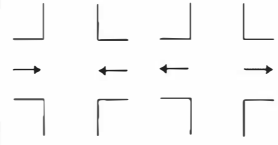 Imploding/Exploding One-Way Street Intersections	Intersection at which opposing legs carry one-way traffic in different directions. • Traffic reduction	• Increased safety due to lack of opposing traffic. • Maintains reasonable access for emergency vehicles. • Interrupts the flow of through traffic.	• May increase trip lengths. • May increase volumes on other streets. • Initial safety concerns as drivers adjust. • Alternative route must exist.	• Signage Estimated Cost Range = $3,000 to $5,000

APPENDIX O

Example Covenants and Easements for Stormwater Facilities

EXAMPLE

COVENANTS FOR PERMANENT MAINTENANCE OF STORMWATER FACILITIES (CPMSF)

Covenants for Permanent Maintenance of Stormwater Facilities (CPMSF) is a permanent maintenance agreement that is recorded (and attached to the deed by reference) as a permanent contract in the official records of the Knox County Register of Deeds. The purpose of this document is to ensure perpetual and proper maintenance, repair and/or replacement of a stormwater facility by the current property owner as well as any future owners. The requirement for a permanent maintenance agreement for stormwater facilities is contained in the Knoxville Stormwater and Street Ordinance (Section 22.5-34). Maintenance of stormwater facilities on private property is the responsibility of the property owner rather than the City of Knoxville. The term *"covenants"* refers to multiple promises from the property owner to the City of Knoxville.

The Stormwater Engineering Division requires that the CPMSF must be properly signed and officially recorded before issuing a site development permit or a building permit. The plans reviewer in the Stormwater Engineering Division will notify the person submitting a site development plan if a CPMSF is required. The completed CPMSF Worksheet (Appendix A) is either mailed or faxed to the Stormwater Engineering Division. The CPMSF document is then prepared and forwarded to the property owner for execution. The property owner is responsible for signing the document and having it notarized. The attached basic CPMSF template is for a typical stormwater detention facility with first flush treatment. Additional requirements may be necessary, based upon the type of detention and/or stormwater quality treatment provided.

When the property owner has signed the document and had it notarized, return (1) the original document and (2) a check in the dollar amount specified and made payable to the Knox County Register of Deeds to:

Construction Bond Coordinator
City of Knoxville, Engineering Department
City County Building, Suite 480
400 Main Street
Knoxville, TN 37902

The Engineering Department records the document with the Register of Deeds for Knox County. The property owner will be sent a copy of the recorded CPMSF document along with a receipt.

The property owner is also responsible for the preparation and recording of a survey plat* that shows the stormwater facility and easement. A survey plat must be prepared by a Registered Land Surveyor (RLS) actively registered in the State of Tennessee. The Instrument Number assigned to the CPMSF by the Knox County Register of Deeds must be placed on the new survey plat, so that future property owners and others will have notice of the obligations that run with ownership of the property. The plat must show an easement boundary around each stormwater or water quality facility, complete with bearings and distances, and a tie line from each easement to a property corner. If the facility easement is not directly accessible from an adjoining public street or right-of-way, then a 20-foot traversable access easement must be shown for the stormwater facility.

---

* NOTE: See the Minimum Subdivision Regulations for platting requirements. Consult the plat review form in Appendix A and the plat review flowcharts in Chapter 2 for additional information, or call the Stormwater Engineering Division (telephone 215-2148) as necessary.

CONTRACT NUMBER: _____

Form 5/10/2000
This instrument prepared by:
Sharon E. Boyce
Senior Attorney
City of Knoxville

THIS DOCUMENT IS A BLANK TEMPLATE USED BY STORMWATER ENGINEERING DIVISION IN PREPARING A CPMSF.

COVENANTS FOR PERMANENT MAINTENANCE OF STORMWATER FACILITIES

THE TERM "STORMWATER FACILITIES" MAY REFER TO WATER QUALITY AND/OR WATER QUANTITY FACILITIES (i.e. detention basins, retention basins, swales, pipes, oil/water separators, sand filtering devices, etc.)

_____ , (an individual/ a Tennessee or other state corporation/partnership), with its (office/residence) located at _____ , (hereinafter "Property Owner") grants these Covenants for Maintenance of Stormwater and/or Water Quality Facilities (hereinafter "Covenants") on this the __ day of _____ 2003.

TEMPLATE ONLY ! Do not use this form to execute CPMSF.

WITNESSETH:

WHEREAS, City of Knoxville Ordinance No. 0-155-03, Stormwater and Street Ordinance, as amended, requires property owners to enter into permanent maintenance agreements for stormwater and/or water quality facilities before the property is developed.

NOW THEREFORE, as a condition of the Department of Engineering's issuance of a Site Development Permit, the Property Owner warrants, covenants and grants as follows:

1. The Property Owner warrants that it is the owner of property located within the City of Knoxville at _____ (address); **CLT Number**: Map___ Insert___ Group___Parcel____; **City Block Number: ____ ;** and more specifically of record by deed dated ____ in (**Warranty Book ____ Page ____** or **as Instrument Number ___**)

with the Knox County Register of Deeds, (hereinafter referred to as the "Property") and that it has the right to grant said Covenants.

2. The Property Owner desires to develop all or a portion of the above described Property according to the Site Development Permit to be issued by the City Engineering Department based on the Property Owner's site/subdivision plan entitled _____, dated _____ and prepared by _____ (hereinafter "Plan").

3. The Property Owner will construct and maintain the stormwater and/or water quality facilities in strict accord with the Plan, specifications, calculations, and conditions required by the Department of Engineering.

4. The Property Owner will provide a surety bond, letter of credit or cash bond acceptable to the City and in an amount to be determined by the Department of Engineering to guarantee that the stormwater and/or water quality facilities are constructed in accordance with the Plan.

5. To ensure that subsequent property owners have notice of these Covenants and the obligations therein, the Property Owner will include in all instruments conveying any or all of the above described Property on which the stormwater and/or water quality facilities are located, the specific instrument numbers referencing these Covenants and the recorded subdivision plat indicated in paragraph 12 herein.

6. The Property Owner will maintain the approved stormwater and/or water quality facilities in good working order acceptable to the City Department of Engineering. Minimum maintenance of the said facilities, shall include sediment, debris, oil, hydrocarbons, and foreign materials removal; cutting and removal of woody vegetation on an annual basis; and keeping emergency spillways functional and clear of woody vegetation and debris so that the operation and capacity of the stormwater and/or water quality facilities continue to meet the standards in said Plan.

7. In order to provide access to stormwater and/or water quality facilities by personnel, vehicles and equipment, the Property Owner will provide a twenty (20) foot wide access within an easement from a public street in strict accord with the Plan and any conditions required by the Department of Engineering. The Property Owner further covenants that no structure or building will be erected on the access easement; that no woody vegetation shall be allowed to grow on the easement; and that no use will be made which will interfere with the use of said easement for access to the facilities. If access to the facilities is obstructed and the City is required to remove the obstruction, the City will follow the notice procedure, double lien, and collection process as set forth in Paragraph 9 herein.

8. Property Owner grants permission to the City, its agents and employees, to enter upon the property to inspect and monitor said facilities whenever the City deems necessary and further for the City or its agents to repair, replace, maintain and reconstruct said facilities as permitted herein.

9. (a) If the City determines that the stormwater detention and/or water quality facilities are not being maintained in good working order and gives written notice to the current property owner to repair, replace, reconstruct or maintain said facilities within a reasonable time, and the property owner fails to comply with the City's notice within the time specified, Property Owner authorizes the City or its agents to enter upon the Property to repair, reconstruct, replace or perform maintenance on said facilities at the Property Owner's expense.

(b) Property Owner further authorizes the City to place a lien for double the amount of said expenses of repair, maintenance or reconstruction against the property.

(c) If the Property Owner fails to pay the City for the above expenses after forty-five (45) days written notice, the Property Owner authorizes the City to collect said expenses from the Property Owner through the appropriate legal action, with the

Property Owner to be liable for the reasonable expenses of collection, court costs, and attorney fees.

(d) Property Owner recognizes, however, that this remedy does not obligate the City to maintain or repair any stormwater facilities and/or water quality facilities or restrict the City from pursuing other or additional legal remedies against the Property Owner.

10. These Covenants shall be binding upon the Property Owner's heirs, administrators, executors, successors and assigns, and any and all subsequent property owners. Upon conveyance of the Property, these Covenants shall transfer to and be binding upon the new property owner, and the original Property Owner shall be released from any and all responsibilities and obligations under these Covenants.

11. These Covenants are permanent and shall run with the land.

12. Property Owner will record a plat showing and accurately defining the easements for stormwater and/or water quality facilities and an access easement to these facilities on a survey plat of record. The plat must reference the Instrument Number where these Covenants are recorded and contain a note that the property owner is responsible for maintaining the facility.

13. Property Owner will record these Covenants with the Knox County Register of Deeds and return the original to the Department of Engineering before the final plat is signed by the Department of Engineering, and before all or any portion of the property is transferred or conveyed.

APPROVED BY DEPARTMENT OF ENGINEERING:

By:_____

Title: _____

Date:_____

THIS DOCUMENT IS A BLANK TEMPLATE USED BY STORMWATER ENGINEERING DIVISION IN PREPARING A CPMSF.

PROPERTY OWNER:

_____

BY: _____

TITLE: _____

THIS DOCUMENT IS A BLANK TEMPLATE USED BY STORMWATER ENGINEERING DIVISION IN PREPARING A NOTARY WITNESS FORM.

STATE OF TENNESSEE

COUNTY OF KNOX

Before me, _____, a Notary Public in and for the County and State aforesaid, personally appeared _____, with whom I am personally acquainted (or proved to me on the basis of satisfactory evidence), and who, upon oath, acknowledged himself to be the _____ (Title) of _____, the within named bargainor, a corporation, and that he/she being authorized so to do, executed the foregoing instrument for the purpose therein contained, by signing the name of the corporation by himself/herself as _____ .

WITNESS, my hand and official seal at office this _____ day of _____ , 2003.

MY COMMISSION EXPIRES:

_____ _____

NOTARY PUBLIC

City of Knoxville, Tennessee
Stormwater Engineering Division
http://www.ci.knoxville.tn.us/engineering/

EXAMPLE

EASEMENTS FOR STORMWATER CONTROL AND WATER QUALITY FACILITIES

The City of Knoxville has been mandated by the federal government to provide for the permanent maintenance of stormwater facilities that manage stormwater runoff and affect stormwater quality entering our streams and other public waters. The *Knoxville Stormwater and Street Ordinance* gives design and development requirements for stormwater facilities. Consequently, the development of private property within the city requires property owners to formally accept responsibility for maintaining these facilities on their property. To acknowledge and facilitate this responsibility, the property owner must execute a special written document and dedicate easements before a site development permit or a building permit will be issued.

The special document is entitled ***Covenants for Permanent Maintenance of Stormwater Facilities*** (CPMSF, or also known as a Covenants document). Upon execution of this document, the property owner covenants or affirms that he will build these facilities according to design plans approved by the City Engineering Department, and that he or future owners of this property will maintain the stormwater facilities in good working order in perpetuity. This document must be recorded with the Knox County Register of Deeds and referenced in future survey plats and deeds. For assistance, contact the City Engineering Stormwater Division at 215-2148.

Section 22.5-34 of the Knoxville Stormwater and Street Ordinance stipulates that permanent easements must be established for stormwater and water quality facilities. These easements must be located, defined, dedicated and identified on a survey plat approved by the Metropolitan Planning Commission (MPC) and recorded with the Knox County Register of Deeds. If any facility is not constructed as shown on the approved design plans and located satisfactorily within the dedicated easement, the owner will be required to revise and re-record the document or plat that dedicates the original easement.

TYPES OF FACILITIES AND EASEMENTS

Easements are required for the following types of facilities, collectively referred to as "stormwater facilities":

- **Stormwater Control Facilities** (detention basin, retention basin, drywell, constructed wetlands)
- **Water Quality Facilities** (oil/water separator, sand filtration inlet, grit chamber, oil skimmer)
- **Drainage Channels and Piping** (culvert, pipe, grate inlet, curb inlet, flume, stream, ditch, swale)

Three types of easements may be required for Stormwater Control and Water Quality Facilities:

- **Facility Easements** (encompasses the facility)
- **Access Easements** (provides access from a public road to the *facility easement)*
- **Drainage Easements** (for open channels and pipes that carry flowing water)

Facility easements are required for all stormwater control and water quality facilities. The amount of easement needed and the location of easement boundaries for **stormwater control facilities** varies by type but can not be less that 20 feet x 20 feet. For detention and retention basins, the easement must be at least 5 feet outside the top of cut slope and at least 5 feet outside the toe of fill slope. The final location of all stormwater control facility easements must be coordinated by the design engineer and the surveyor, and then approved by the Engineering Department.

In addition to easements, a Special Pollution Abatement Permit (SPAP) is required for **water quality facilities.** Like stormwater control facilities, the amount and location of easements needed for water quality facilities must be approved by the Engineering Department but cannot be less than 20 feet x 20 feet. The surveyor, design engineer, and Department representative must coordinate closely in this effort as well.

Access easements are normally required when the facility easement does not directly abut a public road and there is not an easily traversable access route from a public road to the facility. When an access easement is required, it may not be merged with the facility easement.

Drainage easements are required for open channels, piping, and associated structures. This type of easement is required when drain blockage will result in flooding the property of others, or when deemed necessary by the Engineering Director. The width of these easements is determined by several factors, including size, shape, depth of pipe, maintenance equipment anticipated, type and material of pipe, etc. See Policy 04 (Drainage Easements) for minimum easement widths for common pipe sizes and shapes.

PLATTING REQUIREMENTS

Information that must be shown on the survey plat is listed below by the type of easement. Every stormwater control facility and every water quality facility must be located on a permanent easement that is not shared with any other type of utility or access easement.

- FACILITY EASEMENTS

1. Covenants Document Reference and Owner's Responsibility Note – Provide instrument number (15 digits) where the Covenants document is recorded and responsibility note similar to the following:

   "The property owner(s) is (are) responsible for maintaining stormwater facilities on this property. See Covenants document recorded with the Register of Deeds as Instrument No. _____."

2. Performance Bond Stamp – Appropriate stamp on plat and signed by the Stormwater Engineering Division; see Minimum Subdivision Regulations (MSR) Section 44-115.
3. Identification – Identify purpose of easement and if structure is existing or proposed, such as "Easement for As-Built Detention Basin" or "20-Ft. Easement for Proposed Oil/Water Separator".
4. Easement Location - Easement boundary plotted accurately and to scale.

5. Easement Description - Bearings & distances sufficient to permit confirmation of Category I ratio of precision (bearings to nearest minute or better, distances to nearest hundredth of a foot).
6. Property Ties - Bearings & distances sufficient to fix easement location relative to property boundary (bearings to nearest minute or better, distances to nearest hundredth of a foot).
7. Easement Area - Area of stormwater control and water quality facility easements in square feet.
8. Any additional information necessary to properly describe and locate the easement on the ground by field survey.

- ACCESS EASEMENTS

Every stormwater control and water quality facility must have traversable access from a public road. Therefore, an access easement will be required when the facility easement: 1) does not abut a public road, or 2) does not contain a traversable route from a public road to the facility. At the discretion of the Engineering Director, access easement widths may vary but must be at least 20 feet wide. An access easement may not be merged with the facility easement it serves. Minimum requirements for traversable access are contained in Policy 06, Maintenance Access for Stormwater Management Facilities.

Unlike easements that provide primary access to property, access easements to stormwater facilities do not normally require conveyance by a recorded written document. Also, property owners are not normally required to construct a roadway or trail. However, nothing is allowed in these easements that will substantially obstruct access when needed (large trees, buildings, manholes, utility poles, commercial signs, fences, etc.).

The following is required for access easements:

1. Identification and Width – Identify purpose and width of easement, such as "20-Ft. Detention Basin Access Easement" or "20-Ft. Water Quality Facility Access Easement" (also show perpendicular width graphically between right-of-way lines).
2. Easement Location – Easement right-of-way lines and centerline plotted accurately and to scale.
3. Easement Description – Bearings & distances labeled along right-of-way lines sufficient to permit confirmation of Category I ratio of precision (bearings to nearest minute or better, distances to nearest hundredth of a foot) [bearings & distances not required along right-of-way lines if labeling plotted centerline is preferred] .
4. Property Ties – Bearings & distances sufficient to fix easement location relative to public road right-of-way and property boundary (bearings to nearest minute or better, distances to nearest hundredth of a foot).
5. Easement Area – Not required.
6. Any additional information necessary to properly describe and locate the easement on the ground by field survey.

ENGINEERING
STANDARD DRAWINGS

CITY OF WHITEFISH
ENGINEERING STANDARDS DRAWINGS

GENERAL AND STREET DETAILS

APPROVAL BLOCK	SD-1a
RECORD DRAWING CERTIFICATE	SD-1b
SURVEY MONUMENT-PLACED IN ASPHALT	SD-2a
SURVEY MONUMENT-PLACED IN TURF	SD-2b
LOCAL STREET WITH PARKING (BOTH SIDES)	SD-3
LOCAL STREET WITH PARKING (ONE SIDE)	SD-4
LOCAL STREET WITHOUT PARKING	SD-5
LOCAL STREET WITH BIKE LANES (NO PARKING)	SD-6
LOW IMPACT DESIGN (LID) RURAL STREET (NO PARKING)	SD-7
COLLECTOR STREET (NO PARKING)	SD-8
COLLECTOR STREET WITH PARKING (ONE SIDE)	SD-9
ARTERIAL STREET (NO PARKING)\	SD-10
STANDARD CURB AND GUTTER	SD-11
STRAIGHT CURB (NOT ALLOWED IN STREETS)	SD-12
STANDARD SIDEWALK	SD-13
PEDESTRIAN RAMPS	SD-14
DRIVEWAY APPROACH	SD-15
TYPICAL SIGN PLACEMENT	SD-16
TYPICAL SIGN MOUNTING	SD-17
ANTI-SPIN BASE DETAIL	SD-18
PVC TRENCH BEDDING & BACKFILL (PAVED SURFACE)	SD-19a
PVC TRENCH BEDDING & BACKFILL (GRAVELED SURFACE)	SD-19b
PVC TRENCH BEDDING & BACKFILL (UNIMPROVED SURFACE)	SD-19c
PVC TRENCH BEDDING & BACKFILL NOTES	SD-19d
TRENCH PLUG	SD-20

WATER SYSTEM DETAILS

WATER SERVICE – COPPER TUBING	SD-21
WATER SERVICE – PE PIPE	SD-22
FIRE HYDRANT	SD-23
VALVE SETTING	SD-24
VALVE BOX ADJUSTMENT	SD-25
RESIDENTIAL SERVICE WITH FIRE SPRINKLER SYSTEM	SD-26
MULTIFAMILY RESIDENTIAL SERVICES>25 FIXTURE UNITS	SD-27
MULTIFAMILY RESIDENTIAL SERVICES<25 FIXTURE UNITS	SD-28
AIR RELEASE AND BLOWOFF (FIRE HYDRANT)	SD-29
FIRE HYDRANT AND END OF MAIN JOINT RESTRAINTS	SD-30

SANITARY SEWER SYSTEM DETAILS

SANITARY SEWER SERVICE	SD-31
SANITARY SEWER MANHOLE	SD-32a
SANITARY SEWER WITH DROP INLET	SD-32b
SANITARY SEWER NOTES	SD-32c
MANHOLE ADJUSTMENT	SD-33
PRESSURIZED SEWER SERVICE ASSEMBLY	SD-34
INSIDE GRINDER PUMP	SD-35
OUTSIDE GRINDER PUMP	SD-36

STORM DRAINAGE SYSTEM DETAILS

STORM DRAIN SERVICE CONNECTIONS	SD-37
CONCRETE VALLEY GUTTER	SD-38
PLAN VIEW CONC. VALLEY GUTTER WITH APRON	SD-39a
CONCRETE VALLEY GUTTER WITH APRON	SD-39b
STORM DRAIN INLET DETAIL	SD-40
STORM DRAIN MANHOLE	SD-41
AREA DRAIN AND CATCH BASIN	SD-42
INLET APRON	SD-43
BIOSWALE DETAIL	SD-44
DRYWELL DETAIL TYPE 'A'	SD-45a
DRYWELL DETAIL TYPE 'B'	SD-45b
DRYWELL DETAIL NOTES	SD-45c
OUTLET STRUCTURE	SD-46a
OUTLET STRUCTURE	SD-46b

STREET LIGHTING DETAILS

LUMINAIRE AND POLE DETAIL	SD-47a
TYPE 1 PULL BOX	SD-47b
TYPICAL STREET LIGHTING CONDUIT	SD-47c
CONCRETE PAD FOR SERVICE ASSEMBLY	SD-47d
BASE PLATE AND PVC RISER DETAILS	SD-47e
LIGHT POLE BASE DETAIL	SD-47f
SERVICE WIRING DIAGRAM	SD-47g
LIGHTING NOTES	SD-47h

BIKE PATH DETAIL

BIKE PATH	SD-48

EROSION AND SEDIMENTATION CONTROL DETAILS

PRESERVATION OF EXISTING VEGETATION	SD-49

EROSION AND SEDIMENTATION CONTROL DETAILS (CONTINUED)

SEDIMENT/DESILTING BASIN	SD-50
TEMPORARY SEEDING	SD-51
STRAW MULCH	SD-52
HYDRAULIC MULCH	SD-53
POST-PAVING GRAVEL CURB INLET FILTER	SD-54
STRAW BALE SEDIMENT CONTROL	SD-55
FIBER ROLLS	SD-56
EROSION CONTROL DETAILS (FIBER ROLLS)	SD-57
EROSION CONTROL DETAILS (FIBER ROLLS)	SD-58
EROSION CONTROL DETAILS (FIBER ROLLS)	SD-59
TYPICAL SLOPE SOIL STABILIZATION	SD-60
TYPICAL INSTALLATION DETAILS	SD-61
STRAW BALE CHECK DAMS	SD-62
TEMPORARY CHECK DAM (TYPE 1)	SD-63
TEMPORARY CHECK DAM (TYPE 2)	SD-64
TEMPORARY CHECK DAM DETAILS (TYPE 1 & 2)	SD-65
VEHICLE TRACKING PAD	SD-66
SILT FENCE	SD-67

APPROVED FOR CONSTRUCTION

BY: _____ DATE: _____

CITY ENGINEER

BY: _____ DATE: _____

FIRE MARSHAL

The following note must be placed on the title sheet (first sheet) of all improvement plans submitted to the City of Whitefish Public Works Department. Prior to improvement plans being accepted as complete, the signed **RECORD DRAWINGS CERTIFICATE** will be required.

RECORD DRAWINGS CERTIFICATE

ALL INFORMATION SHOWN ON THESE PLANS HAS BEEN PREPARED BY OR UNDER DIRECTION OF, THE UNDERSIGNED ENGINEER. ADJUSTMENTS MADE IN THE FIELD DURING CONSTRUCTION ARE INCLUDED HEREIN AND ARE BASED UPON FIELD OBSERVATIONS MADE UNDER THE DIRECTION OF OR BY THE UNDERSIGNED **AND** CITY OF WHITEFISH WHEN THE ENGINEER IS ADVISED IN WRITING OF SUCH CHANGE. THE ENGINEER PREPARING THESE PLANS WILL NOT BE RESPONSIBLE FOR, OR LIABLE FOR CHANGES TO THESE PLANS NOT AUTHORIZED BY THE ENGINEER.

DATE	ENGINEER SIGNATURE (STAMP OR SEAL)
DATE	CONTRACTOR SIGNATURE

The following must be included in the lower right hand corner of all remaining sheets of a plan set. The date and initials of the responsible engineer shall be completed, as part of the "RECORD DRAWINGS" required as noted below.

RECORD DRAWINGS

DATE	ENGINEER INITIAL
DATE	CONTRACTOR INITIAL

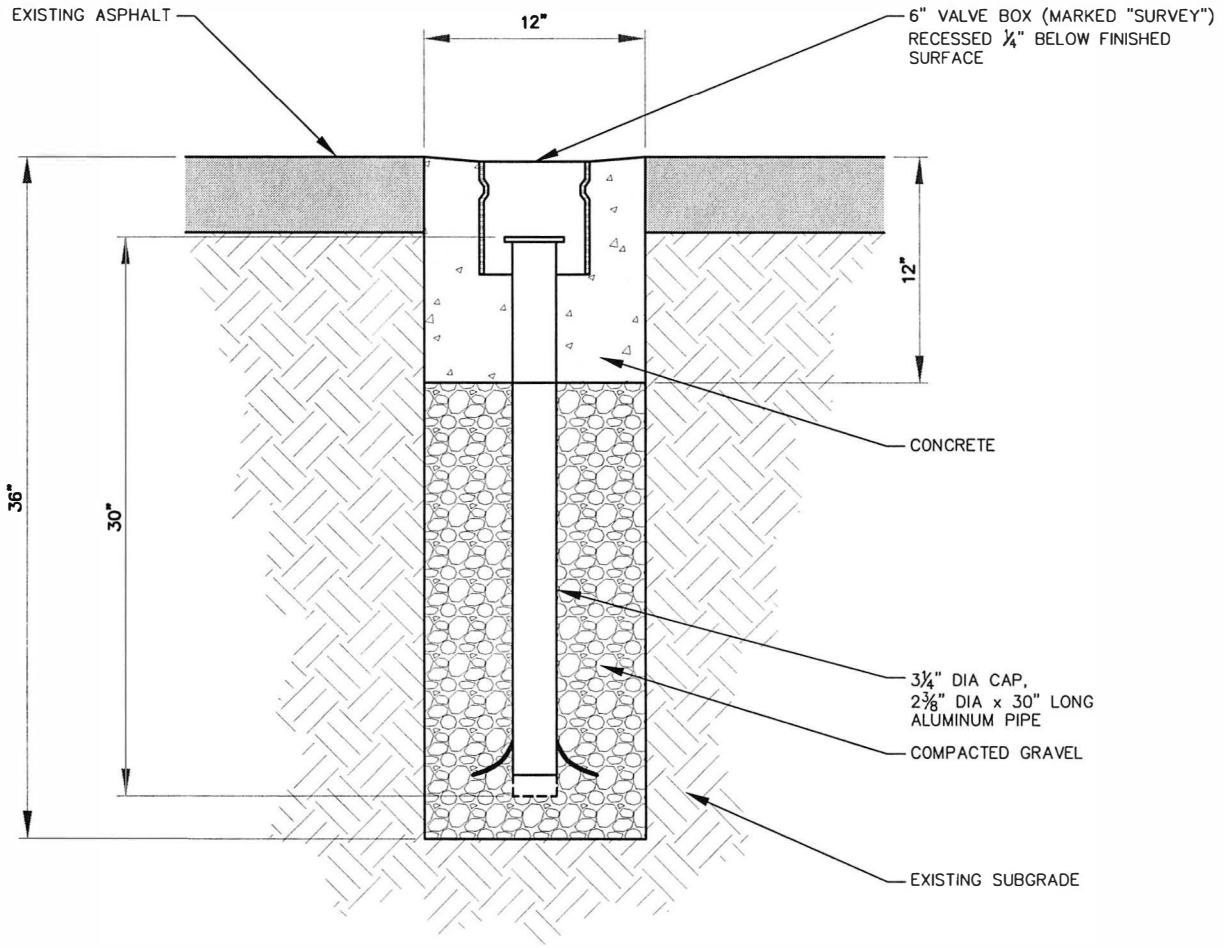

SURVEY MONUMENT - PLACED IN ASPHALT

SCALE: NONE

CONSTRUCTION STANDARDS CITY OF WHITEFISH	SURVEY MONUMENT – PLACED IN ASPHALT	SD–2a

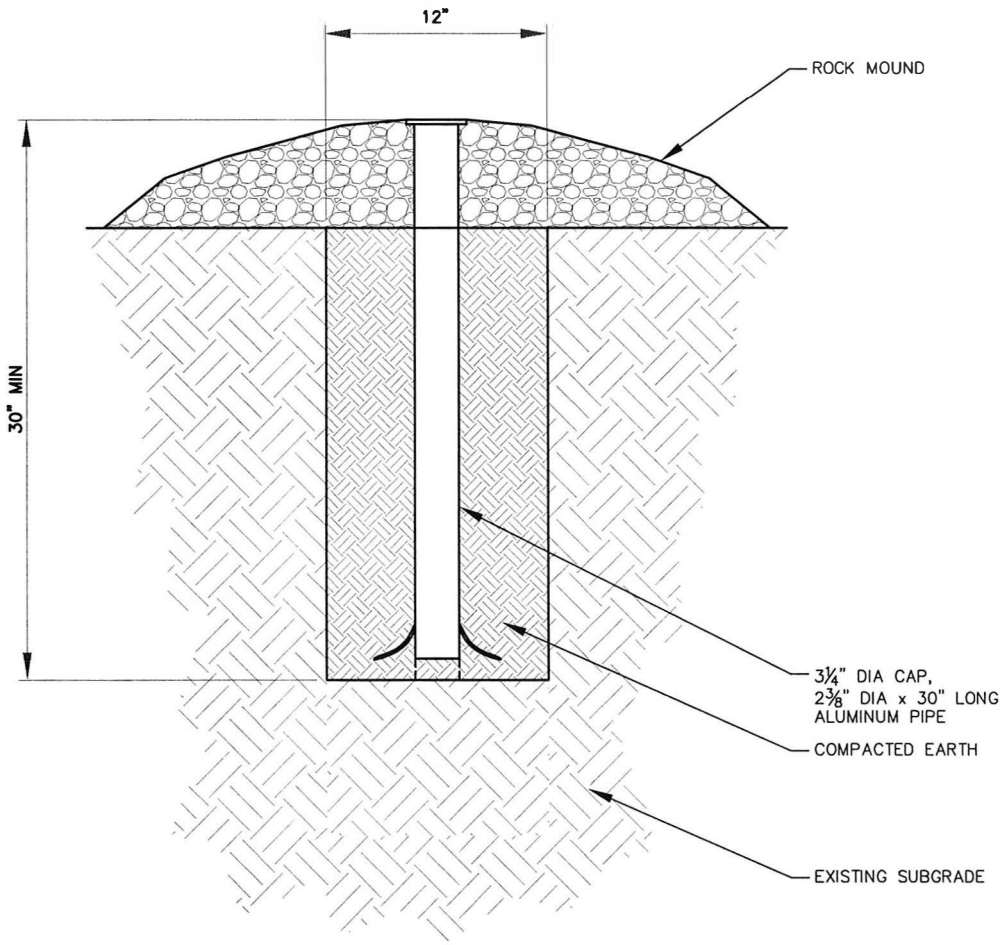

SURVEY MONUMENT - PLACED IN TURF

SCALE: NONE

CONSTRUCTION STANDARDS CITY OF WHITEFISH	SURVEY MONUMENT – PLACED IN TURF	SD-2b

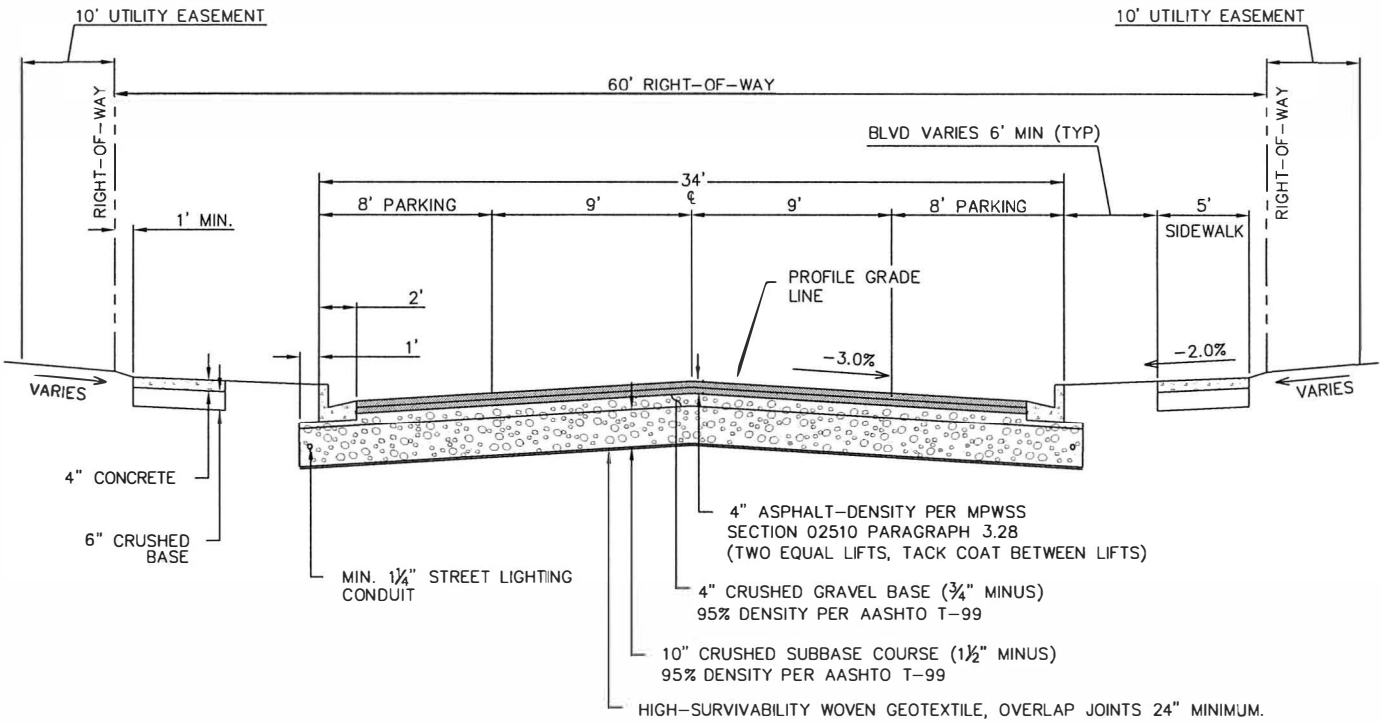

34 FT. TYPICAL ROADWAY SECTION

SCALE: NONE

NOTES:

1. THE WIDTH OF THE RIGHT OF WAY MAY HAVE TO BE INCREASED DUE TO ROAD SLOPES, UTILITIES, TRAFFIC VOLUME OR OTHER REQUIREMENTS.
2. ALL TOPSOILED AREAS TO BE SEEDED OR SODDED.
3. THE MAXIMUM GRADE SHALL BE 9%.
4. GEOTEXTILE SHALL BE MIRAFI 500x OR APPROVED EQUAL.

   GEOTEXTILE INSTALLATION:

   A. COMPACT SUBGRADE TO 95% PROCTOR.
   B. REMOVE ALL WRINKLES.
   C. DO NOT DRIVE OR OPERATE EQUIPMENT ON FABRIC.
5. UTILITY NOTE: NO UNDERGROUND UTILITIES SHALL BE PLACED IN THE BOULEVARD BETWEEN THE BACK OF CURB AND SIDEWALK, UNDERGROUND UTILITIES (OTHER THAN SEWER, WATER, STORM SEWER, AND STREET LIGHTING) SHALL BE LOCATED BETWEEN BACK OF SIDEWALK AND THE EASEMENT LINE.

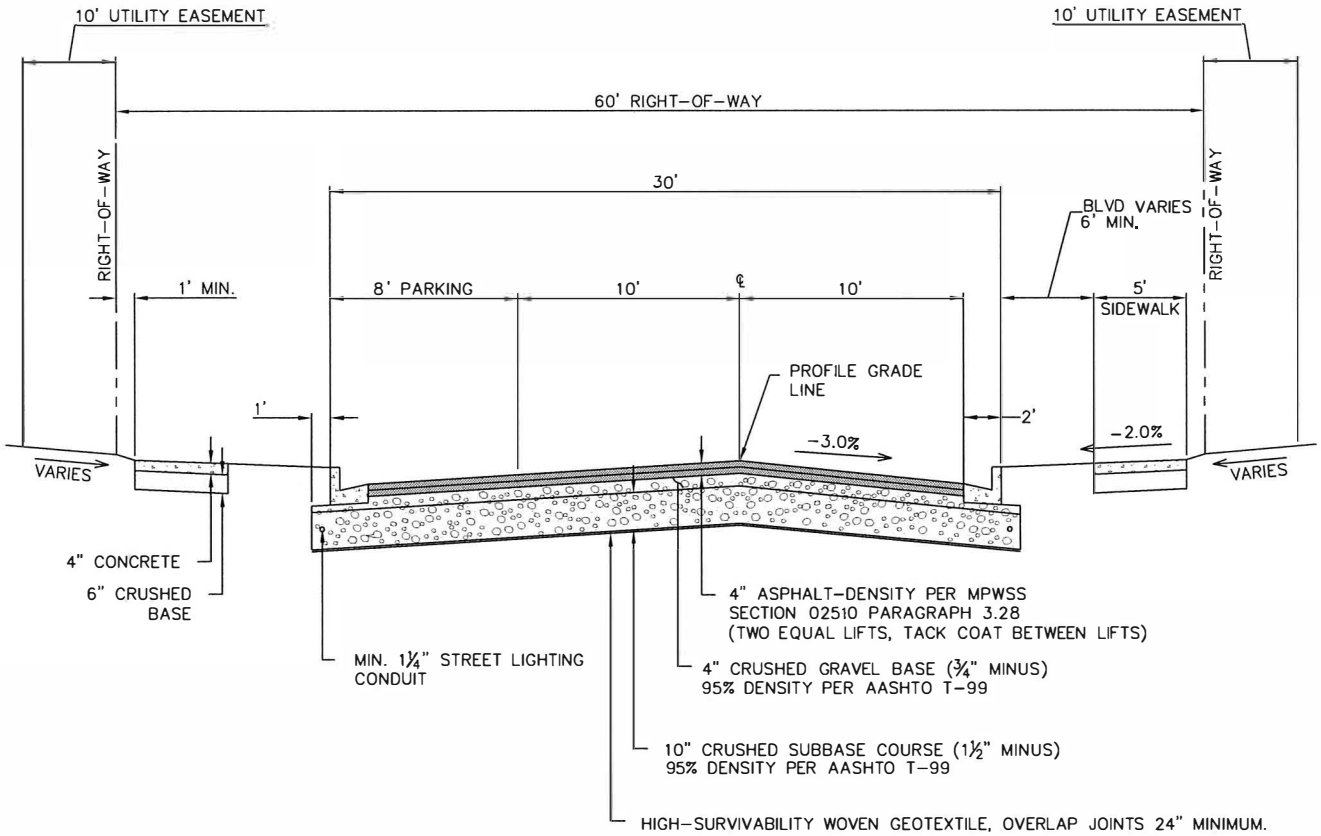

30 FT. TYPICAL ROADWAY SECTION

SCALE: NONE

NOTES:

1. THE WIDTH OF THE RIGHT OF WAY MAY HAVE TO BE INCREASED DUE TO ROAD SLOPES, UTILITIES, TRAFFIC VOLUME OR OTHER REQUIREMENTS.
2. ALL TOPSOILED AREAS TO BE SEEDED OR SODDED.
3. THE MAXIMUM GRADE SHALL BE 9%.
4. GEOTEXTILE SHALL BE MIRAFI 500x OR APPROVED EQUAL.

   GEOTEXTILE INSTALLATION:

   A. COMPACT SUBGRADE TO 95% PROCTOR.
   B. REMOVE ALL WRINKLES.
   C. DO NOT DRIVE OR OPERATE EQUIPMENT ON FABRIC.
5. UTILITY NOTE: NO UNDERGROUND UTILITIES SHALL BE PLACED IN THE BOULEVARD BETWEEN THE BACK OF CURB AND SIDEWALK, UNDERGROUND UTILITIES (OTHER THAN SEWER, WATER, STORM SEWER, AND STREET LIGHTING) SHALL BE LOCATED BETWEEN BACK OF SIDEWALK AND THE EASEMENT LINE.

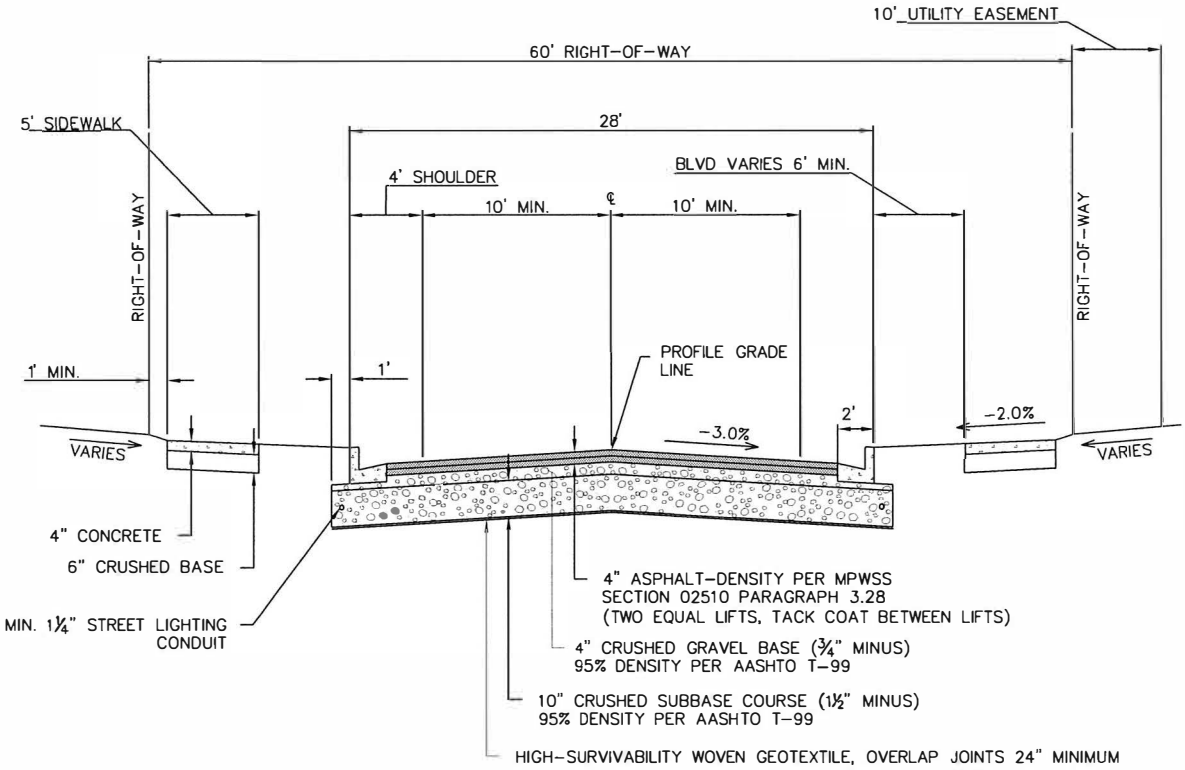

28 FT. TYPICAL ROADWAY SECTION

SCALE: NONE

NOTES:

1. THE WIDTH OF PAVEMENT WILL DEPEND ON LOCAL CONDITIONS SUCH AS WIDTH OF EXISTING STREETS IN THE AREA, ANTICIPATED TRAFFIC VOLUME, PARKING REQUIREMENTS, FUTURE EXTENSIONS, ETC.
2. THE WIDTH OF THE R/W MAY HAVE TO BE INCREASED DUE TO ROAD SLOPES, UTILITIES, TRAFFIC VOLUME OR OTHER REQUIREMENTS.
3. ALL TOPSOILED AREAS TO BE SEEDED OR SODDED.
4. THE MAXIMUM GRADE SHALL BE 9%.
5. GEOTEXTILE SHALL BE MIRAFI 500x OR APPROVED EQUAL.

   GEOTEXTILE INSTALLATION:

   A. COMPACT SUBGRADE TO 95% PROCTOR.
   B. REMOVE ALL WRINKLES.
   C. DO NOT DRIVE OR OPERATE EQUIPMENT ON FABRIC.
6. UTILITY NOTE: NO UNDERGROUND UTILITIES SHALL BE PLACED IN THE BOULEVARD BETWEEN THE BACK OF CURB AND SIDEWALK, UNDERGROUND UTILITIES (OTHER THAN SEWER, WATER, STORM SEWER, AND STREET LIGHTING) SHALL BE LOCATED BETWEEN BACK OF SIDEWALK AND THE EASEMENT LINE.

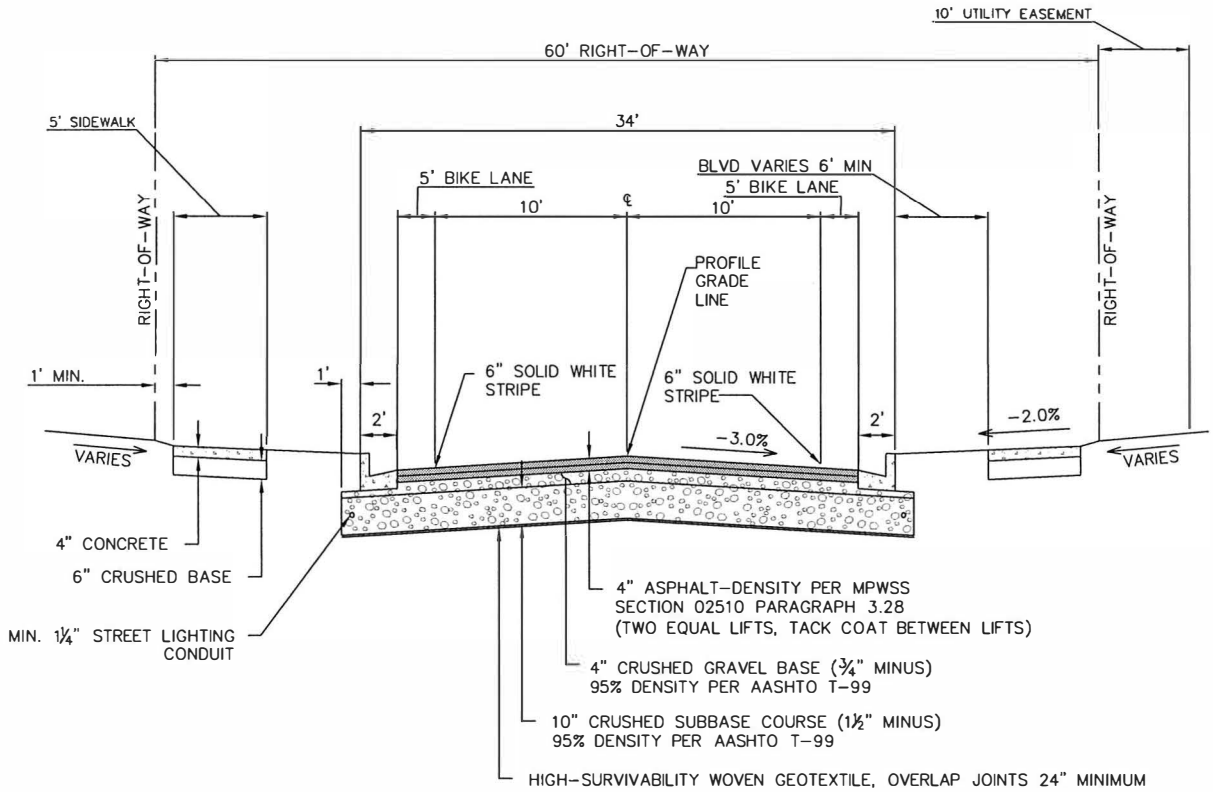

34 FT. TYPICAL ROADWAY SECTION

SCALE: NONE

NOTES:

1. THE WIDTH OF PAVEMENT WILL DEPEND ON LOCAL CONDITIONS SUCH AS WIDTH OF EXISTING STREETS IN THE AREA, ANTICIPATED TRAFFIC VOLUME, PARKING REQUIREMENTS, FUTURE EXTENSIONS, ETC.
2. THE WIDTH OF THE RIGHT OF WAY MAY HAVE TO BE INCREASED DUE TO ROAD SLOPES, UTILITIES, TRAFFIC VOLUME OR R OTHER REQUIREMENTS.
3. ALL TOPSOILED AREAS TO BE SEEDED OR SODDED.
4. THE MAXIMUM GRADE SHALL BE 9%.
5. GEOTEXTILE SHALL BE MIRAFI 500x OR APPROVED EQUAL.

   GEOTEXTILE REPLACEMENT:

   A. COMPACT SUBGRADE TO 95% PROCTOR.
   B. REMOVE ALL WRINKLES.
   C. DO NOT DRIVE OR OPERATE EQUIPMENT ON FABRIC.
6. UTILITY NOTE: NO UNDERGROUND UTILITIES SHALL BE PLACED IN THE BOULEVARD BETWEEN THE BACK OF CURB AND SIDEWALK, UNDERGROUND UTILITIES (OTHER THAN SEWER, WATER, STORM SEWER, AND STREET LIGHTING) SHALL BE LOCATED BETWEEN BACK OF SIDEWALK AND THE EASEMENT LINE.

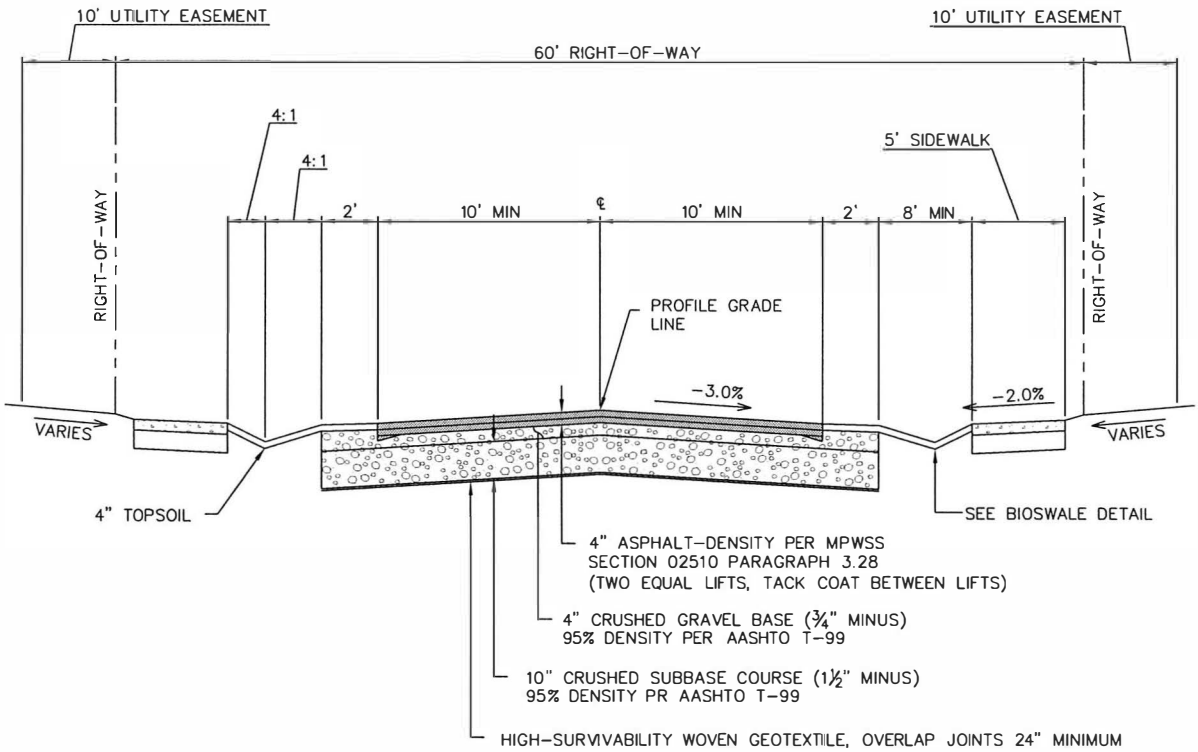

24' RURAL ROADWAY SECTION (20' ASPHALT)

SCALE: NONE

NOTES:

1. THIS CROSS-SECTION MAY BE USED ONLY WHEN THE AREA ADJACENT TO THE PROPOSED DEVELOPMENT DOES NOT HAVE CURBING OR ESTABLISHED STORM DRAINAGE SYSTEMS. THE CROSS-SECTION MUST BE APPROVED BY THE PUBLIC WORKS DIRECTOR PRIOR TO INCORPORATING INTO THE DRAWINGS.
2. THE ASPHALT EDGE MUST BE THICKENED TO PREVENT CRACKING.
3. THE WIDTH OF THE RIGHT OF WAY MAY HAVE TO BE INCREASED DUE TO ROAD SLOPES, UTILITIES, TRAFFIC VOLUME OR OTHER REQUIREMENTS.
4. ALL TOPSOILED AREAS TO BE SEEDED OR SODDED.
5. THE MAXIMUM GRADE SHALL BE 9%.
6. GEOTEXTILE SHALL BE MIRAFI 500x OR APPROVED EQUAL.

   GEOTEXTILE INSTALLATION:

   A. COMPACT SUBGRADE TO 95% PROCTOR.
   B. REMOVE ALL WRINKLES.
   C. DO NOT DRIVE OR OPERATE EQUIPMENT ON FABRIC.

7. UTILITY NOTE: UNDERGROUND UTILITIES (OTHER THAN SEWER, WATER, AND STORM SEWER) SHALL BE LOCATED BETWEEN BACK OF SIDEWALK AND THE EASEMENT LINE.

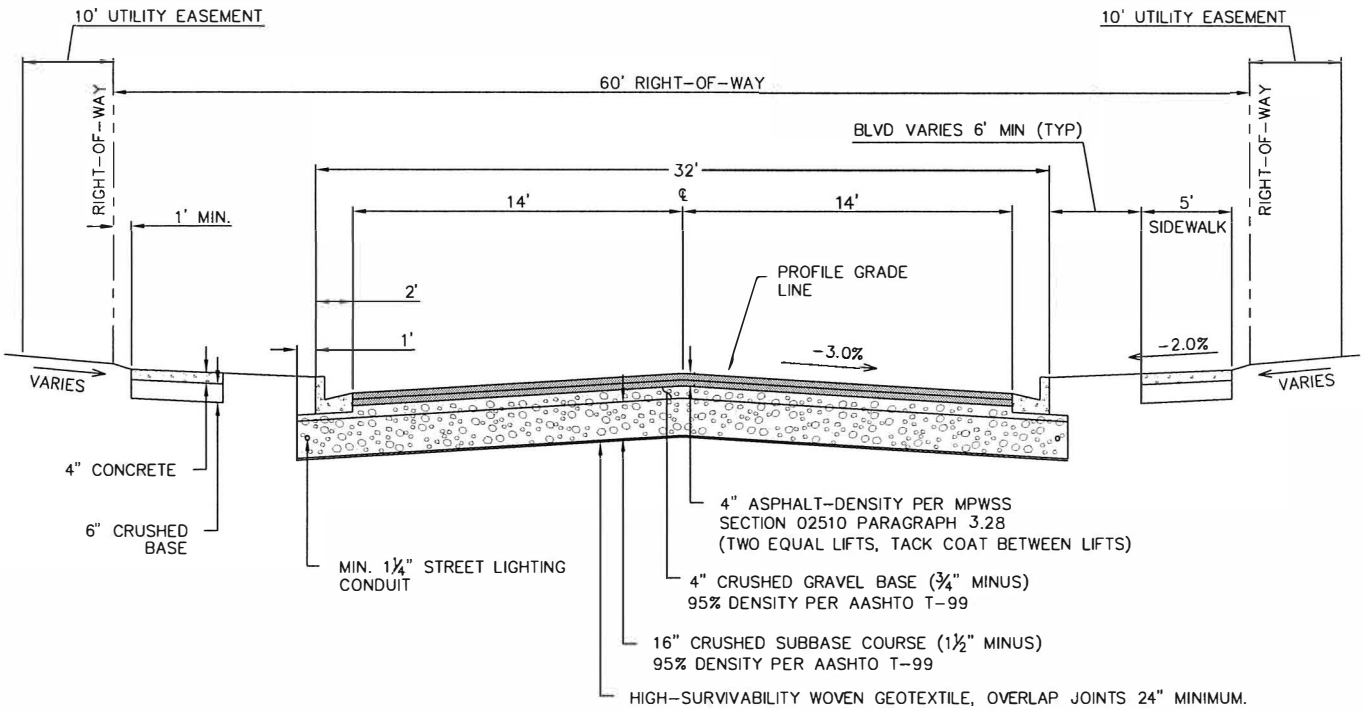

32 FT. TYPICAL ROADWAY SECTION

SCALE: NONE

NOTES:

1. THE WIDTH OF THE RIGHT OF WAY MAY HAVE TO BE INCREASED DUE TO ROAD SLOPES, UTILITIES, TRAFFIC VOLUME OR OTHER REQUIREMENTS.
2. ALL TOPSOILED AREAS TO BE SEEDED OR SODDED.
3. THE MAXIMUM GRADE SHALL BE 8%.
4. GEOTEXTILE SHALL BE MIRAFI 500x OR APPROVED EQUAL.

   GEOTEXTILE INSTALLATION:

   A. COMPACT SUBGRADE TO 95% PROCTOR.
   B. REMOVE ALL WRINKLES.
   C. DO NOT DRIVE OR OPERATE EQUIPMENT ON FABRIC.

5. UTILITY NOTE: NO UNDERGROUND UTILITIES SHALL BE PLACED IN THE BOULEVARD BETWEEN THE BACK OF CURB AND SIDEWALK, UNDERGROUND UTILITIES (OTHER THAN SEWER, WATER, STORM SEWER, AND STREET LIGHTING) SHALL BE LOCATED BETWEEN BACK OF SIDEWALK AND THE EASEMENT LINE.

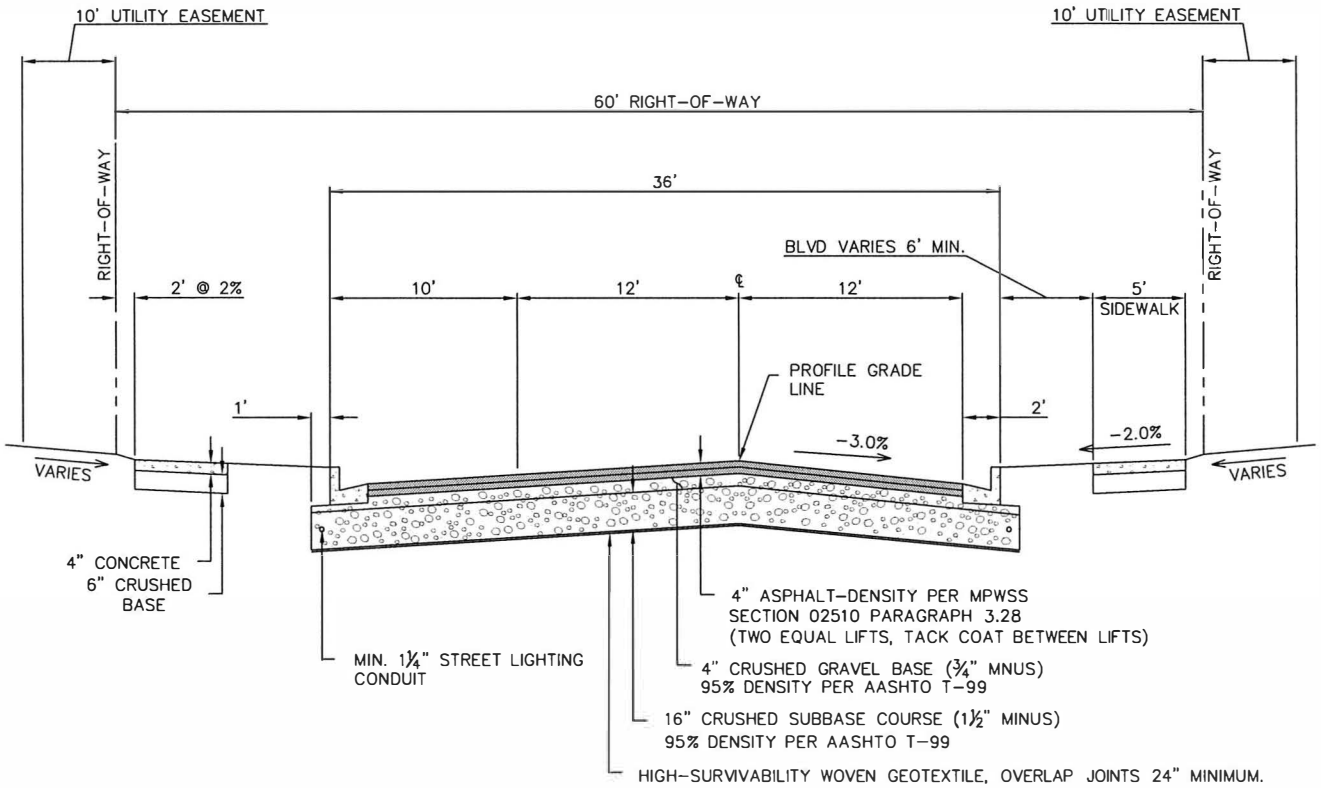

36 FT. TYPICAL ROADWAY SECTION

SCALE: NONE

NOTES:

1. THE WIDTH OF THE R/W MAY HAVE TO BE INCREASED DUE TO ROAD SLOPES, UTILITIES, TRAFFIC VOLUME OR OTHER REQUIREMENTS.
2. ALL TOPSOILED AREAS TO BE SEEDED OR SODDED.
3. THE MAXIMUM GRADE SHALL BE 8%.
4. GEOTEXTILE SHALL BE MIRAFI 500x OR APPROVED EQUAL.

   GEOTEXTILE INSTALLATION:

   A. COMPACT SUBGRADE TO 95% PROCTOR.
   B. REMOVE ALL WRINKLES.
   C. DO NOT DRIVE OR OPERATE EQUIPMENT ON FABRIC.

5. UTILITY NOTE: NO UNDERGROUND UTILITIES SHALL BE PLACED IN THE BOULEVARD BETWEEN THE BACK OF CURB AND SIDEWALK, UNDERGROUND UTILITIES (OTHER THAN SEWER, WATER, STORM SEWER, AND STREET LIGHTING) SHALL BE LOCATED BETWEEN BACK OF SIDEWALK AND THE EASEMENT LINE.

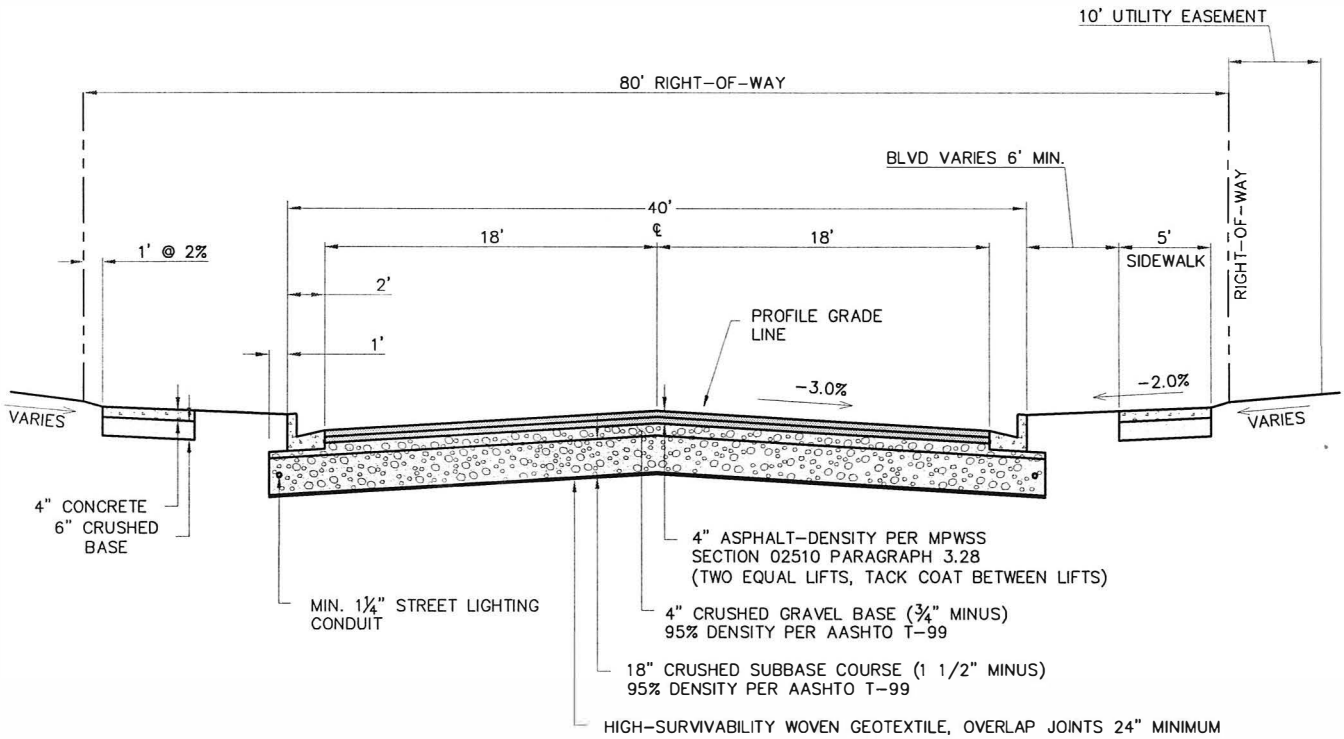

40' ARTERIAL TYPICAL ROADWAY SECTION

SCALE: NONE

NOTES:

1. THE WIDTH OF THE RIGHT OF WAY MAY HAVE TO BE INCREASED DUE TO ROAD SLOPES, UTILITIES, TRAFFIC VOLUME OR OTHER REQUIREMENTS.
2. ALL TOPSOILED AREAS TO BE SEEDED OR SODDED.
3. THE MAXIMUM GRADE SHALL BE 6%.
4. THE CITY ENGINEER MAY REQUIRE THAT TRAFFIC LOAD AND SOIL ANALYSIS BE DONE AS PART OF STREET DESIGN PREPARED BY A PROFESSIONAL ENGINEER.
5. GEOTEXTILE SHALL BE MIRAFI 500x OR APPROVED EQUAL.

   GEOTEXTILE INSTALLATION:

   A. COMPACT SUBGRADE TO 95% PROCTOR.
   B. REMOVE ALL WRINKLES.
   C. DO NOT DRIVE OR OPERATE EQUIPMENT ON FABRIC.
6. UTILITY NOTE: NO UNDERGROUND UTILITIES SHALL BE PLACED IN THE BOULEVARD BETWEEN THE BACK OF CURB AND SIDEWALK, UNDERGROUND UTILITIES (OTHER THAN SEWER, WATER, STORM SEWER, AND STREET LIGHTING) SHALL BE LOCATED BETWEEN BACK OF SIDEWALK AND THE EASEMENT LINE.

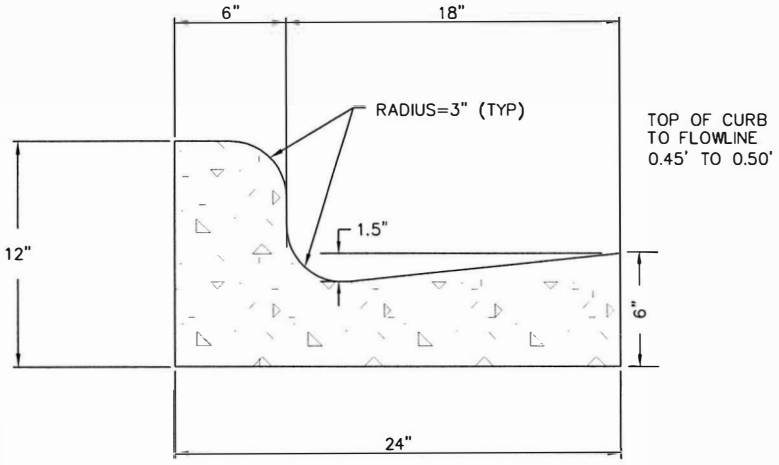

STANDARD CURB AND GUTTER

SCALE: NONE

NOTES:

1. $\frac{1}{2}$" EXPANSION JOINT MATERIAL SHALL BE PLACED AT THE P.C.
2. CONTRACTION JOINT SHALL BE PLACED AT EVERY 15' OF CURB LENGTH AND SHALL HAVE A MINIMUM DEPTH OF $\frac{3}{4}$" AND MINIMUM WIDTH OF $\frac{1}{8}$". CONTRACTION JOINTS SHALL BE CONSTRUCTED BY SAWING OR SCORING. A TOOL SHALL BE USED WHICH WILL LEAVE CORNERS ROUNDED AND DESTROY AGGREGATE INTERLOCK FOR THE SPECIFIED MINIMUM DEPTH.
3. GRADE, ALIGNMENT AND FORMS SHALL BE INSPECTED BY THE CITY PRIOR TO POURING.
4. CONCRETE SHALL BE M-4000 WITH $\frac{3}{4}$" MAXIMUM AGGREGATE AND A 28-DAY STRENGTH OF 4000 PSI, 5% TO 8% AIR CONTENT WITH A MAXIMUM SLUMP OF FOUR (4) INCHES.
5. INDIVIDUAL CONTRACTORS FORMS MAY VARY SLIGHTLY FROM THIS PATTERN. PATTERNS WHICH ACHIEVE ESSENTIALLY THE SAME RESULT AS THE ABOVE PATTERN MAY BE APPROVED BY THE CITY.
6. FOUR INCHES OF BASE MATERIAL IS REQUIRED. BASE MATERIAL SHALL BE $\frac{3}{4}$" CRUSHED BASE COURSE COMPACTED TO 95% PER AASHTO T-99.

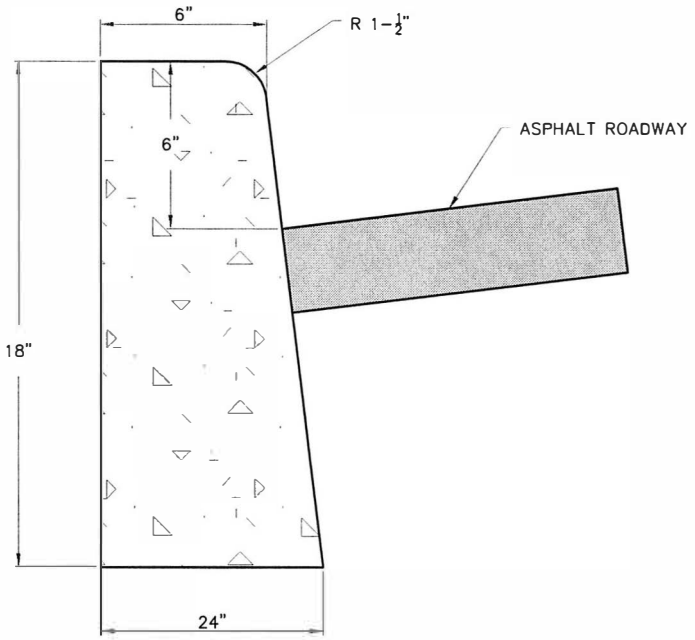

STRAIGHT CURB

SCALE: NONE

NOTES:

1. ½" EXPANSION JOINT MATERIAL SHALL BE PLACED AT THE P.C.
2. CONTRACTION JOINT SHALL BE PLACED AT EVERY 15' OF CURB LENGTH AND SHALL HAVE A MINIMUM DEPTH OF ¾" AND MINIMUM WIDTH OF ⅛". CONTRACTION JOINTS SHALL BE CONSTRUCTED BY SAWING OR SCORING. A TOOL SHALL BE USED WHICH WILL LEAVE CORNERS ROUNDED AND DESTROY AGGREGATE INTERLOCK FOR THE SPECIFIED MINIMUM DEPTH.
3. GRADE, ALIGNMENT AND FORMS SHALL BE INSPECTED BY THE CITY PRIOR TO POURING.
4. CONCRETE SHALL BE M-4000 WITH ¾" MAXIMUM AGGREGATE AND A 28-DAY STRENGTH OF 4000 PSI, 5% TO 8% AIR CONTENT WITH A MAXIMUM SLUMP OF FOUR (4) INCHES.
5. INDIVIDUAL CONTRACTORS FORMS MAY VARY SLIGHTLY FROM THIS PATTERN. PATTERNS WHICH ACHIEVE ESSENTIALLY THE SAME RESULT AS THE ABOVE PATTERN MAY BE APPROVED BY THE CITY.
6. FOUR INCHES OF CRUSHED BASE COURSE MATERIAL IS REQUIRED. CRUSHED BASE COURSE MATERIAL SHALL BE ¾" CRUSHED GRAVEL COMPACTED TO 95% PER AASHTO T-99.
7. USE OF STRAIGHT CURB IS RESTRICTED TO SPECIFIC APPLICATION AND SHALL REQUIRE PRIOR APPROVAL FROM THE CITY ENGINEER.

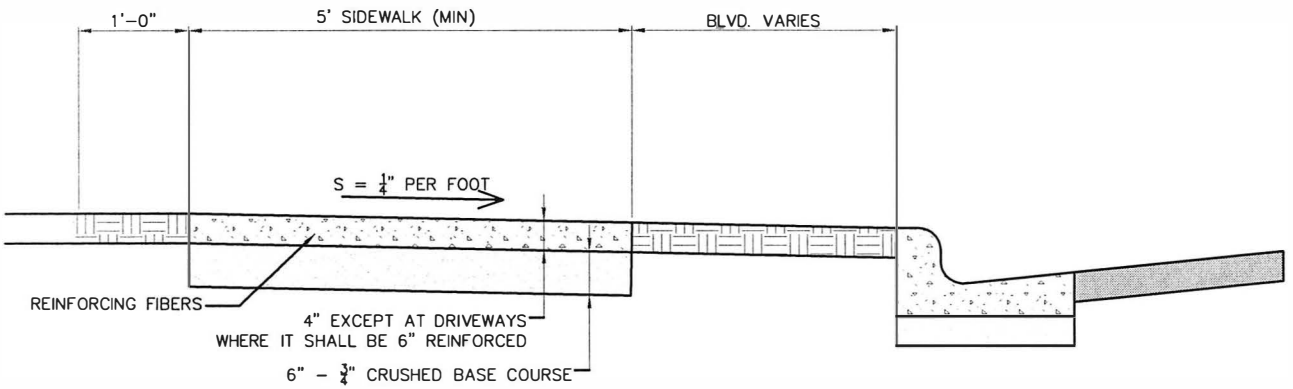

STANDARD SIDEWALK

SCALE: NONE

NOTES:

1. CONCRETE SHALL BE M-4000 WITH ¾" MAXIMUM AGGREGATE AND A 28-DAY STRENGTH OF 4000 PSI, 5% TO 8% AIR CONTENT WITH A MAXIMUM SLUMP OF FOUR (4) INCHES. CONCRETE SHALL INCLUDE 0.75 POUNDS OF REINFORCING FIBERS PER CUBIC YARD.
2. CONTRACTION JOINTS SHALL BE SPACED THE SAME DIMENSION AS THE WIDTH BUT NOT EXCEED 6 FEET EACH WAY. CONTRACTION JOINTS SHALL BE CONSTRUCTED BY SAWING OR SCORING. A TOOL SHALL BE USED WHICH WILL LEAVE CORNERS ROUNDED AND DESTROY AGGREGATE INTERLOCK FOR THE SPECIFIED MINIMUM DEPTH. CONTRACTION JOINTS SHALL BE A MINIMUM OF ¼ OF THE TOTAL DEPTH OF THE CONCRETE.
3. ALL SIDEWALKS GREATER THAN SIX FEET IN WIDTH SHALL BE SAWCUT LENGTHWISE DOWN THE CENTER A MINIMUM OF ¼ THE TOTAL DEPTH OF THE CONCRETE.
4. EXPANSION JOINTS, USING ½" MATERIAL SHALL BE SPACED AT INTERVALS OF 45' MAXIMUM.
5. ALL EDGES AND JOINTS SHALL BE ROUNDED WITH AN EDGING TOOL OF A MINIMUM ¼" RADIUS.
6. SIX INCHES OF BASE MATERIAL IS REQUIRED. BASE MATERIAL SHALL BE ¾" CRUSHED BASE COURSE COMPACTED TO 95% PER AASHTO, T-99, OR SAND THOROUGHLY COMPACTED IN PLACE.
7. GRADE, ALIGNMENT AND FORMS SHALL BE INSPECTED BY THE CITY OR THEIR DESIGNATED INSPECTOR PRIOR TO POURING.
8. ALL CONCRETE DRIVEWAY SECTIONS SHALL BE 6" THICK WITH REINFORCEMENT. (SEE DRIVEWAY APPROACH DETAIL SD-15)
9. ALL COLD JOINTS SHALL HAVE SMOOTH DOWEL BARS PLACED IN BOTTOM ⅓ OF CONCRETE AT 18" O.C. EACH WAY & 6" FROM EDGES, OR KEY WAYS INSTALLED TO PREVENT VERTICAL SEPARATION.

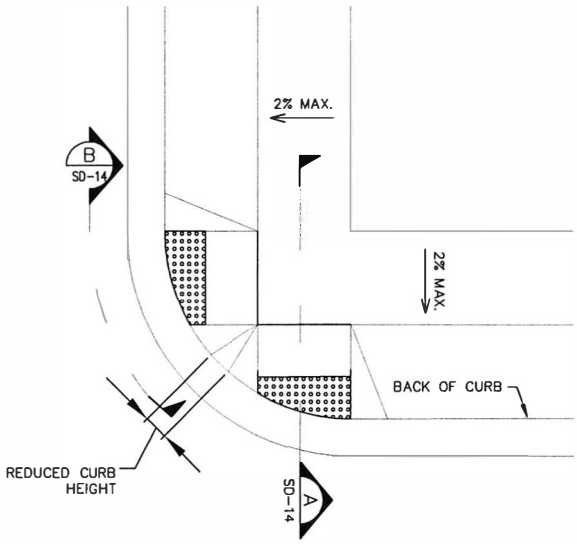

PLAN

PEDESTRIAN RAMP

SCALE: NONE

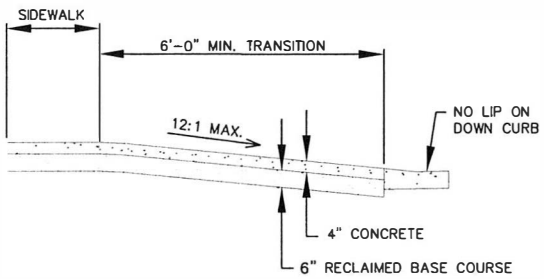

SECTION A
SCALE: NONE SD-14

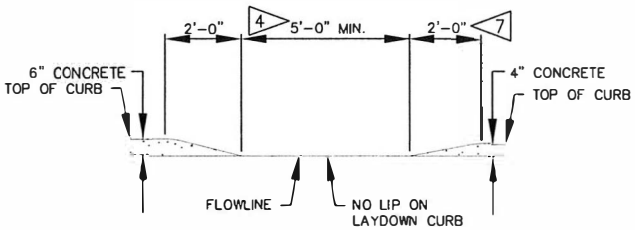

SECTION B
SCALE: NONE SD-14

NOTES:

1. RAMP SLOPE SHALL NOT BE STEEPER THAN 12:1.
2. SIDEWALK CROSS-SLOPES SHALL NOT EXCEED 2%.
3. BEGIN RAMP SLOPE AT FLOWLINE OF GUTTER.

4 VARIES WITH CURB RETURN RADIUS.

5. CURB RAMPS MUST HAVE A DETECTABLE WARNING FEATURE EXTENDING THE FULL WIDTH OF THE RAMP. THE DETECTABLE SURFACE MUST CONSIST OF RAISED TRUNCATED DOMES WITH A DIAMETER OF NOMINAL 0.9 INCHES, A HEIGHT OF NOMINAL 0.2 INCHES AND A CENTER TO CENTER SPACING OF NOMINAL 2.35 INCHES AND BE A LEAST 3' IN WIDTH. THE TEXTURE AND COLOR OF THE DETECTABLE WARNING FEATURE MUST CONTRAST WITH SURROUNDING SURFACES.
6. SEE MPWSS 02529 FOR JOINT REQUIREMENTS.

7 TRANSITION TO 4" CURB BETWEEN PEDESTRIAN RAMPS.

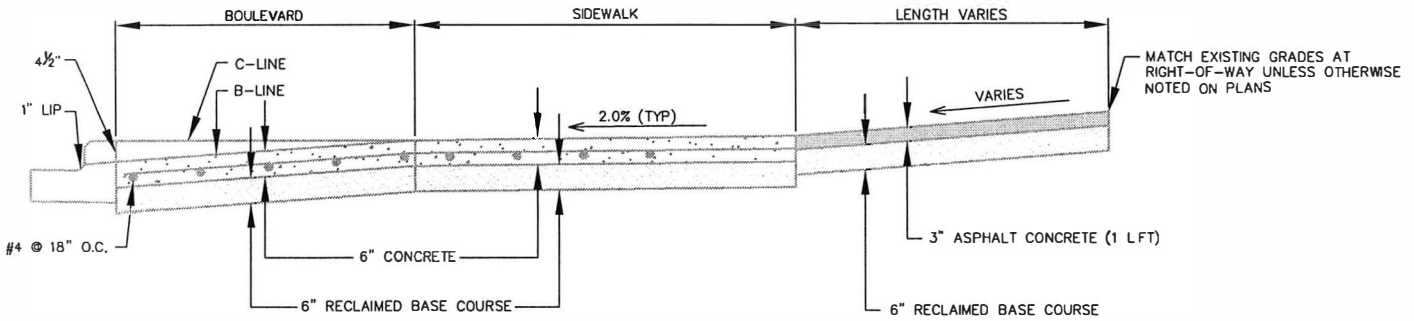

SECTION (A)
SCALE: NONE SD-15

NOTES:

1. PLACE #4 REBAR @ 18" O.C. SUPPORTED BY 2" TALL CHAIRS IN ALL 6" CONCRETE.
2. SEE MPWSS 02529 FOR JOINT REQUIREMENTS.

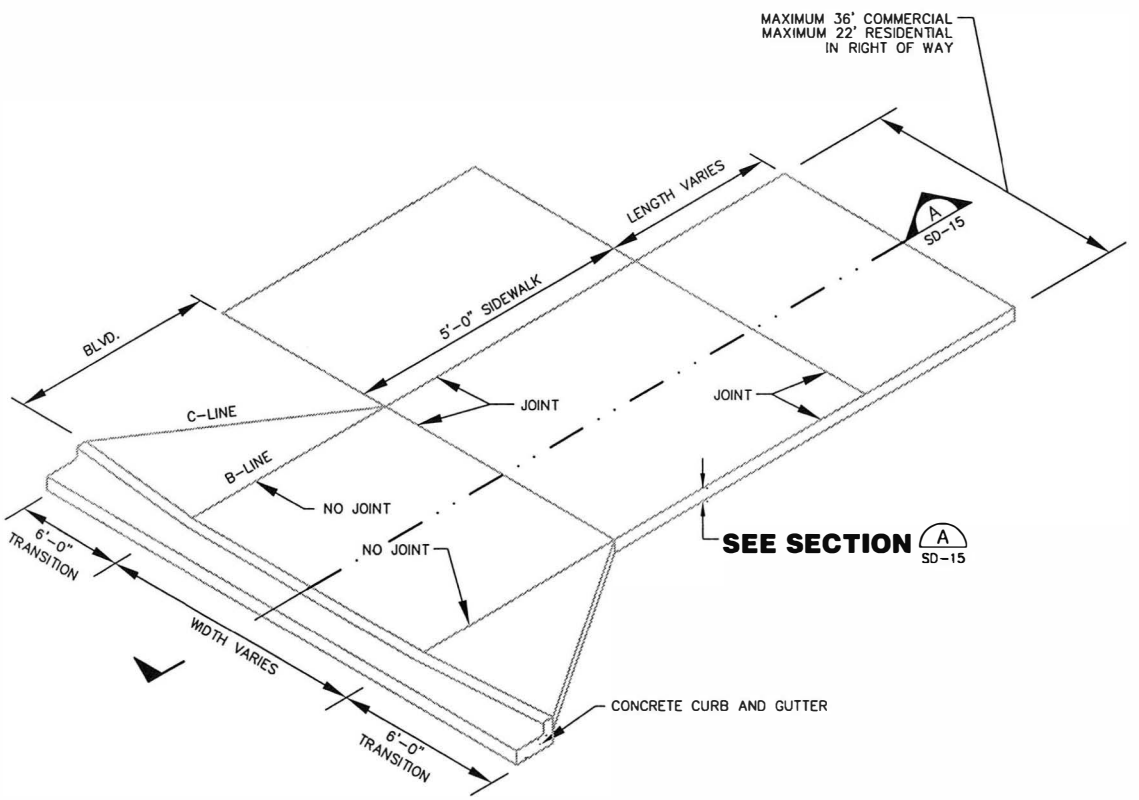

DRIVEWAY APPROACH (1)
SCALE: NONE SD-15

CONSTRUCTION STANDARDS CITY OF WHITEFISH	DRIVEWAY APPROACH	SD-15

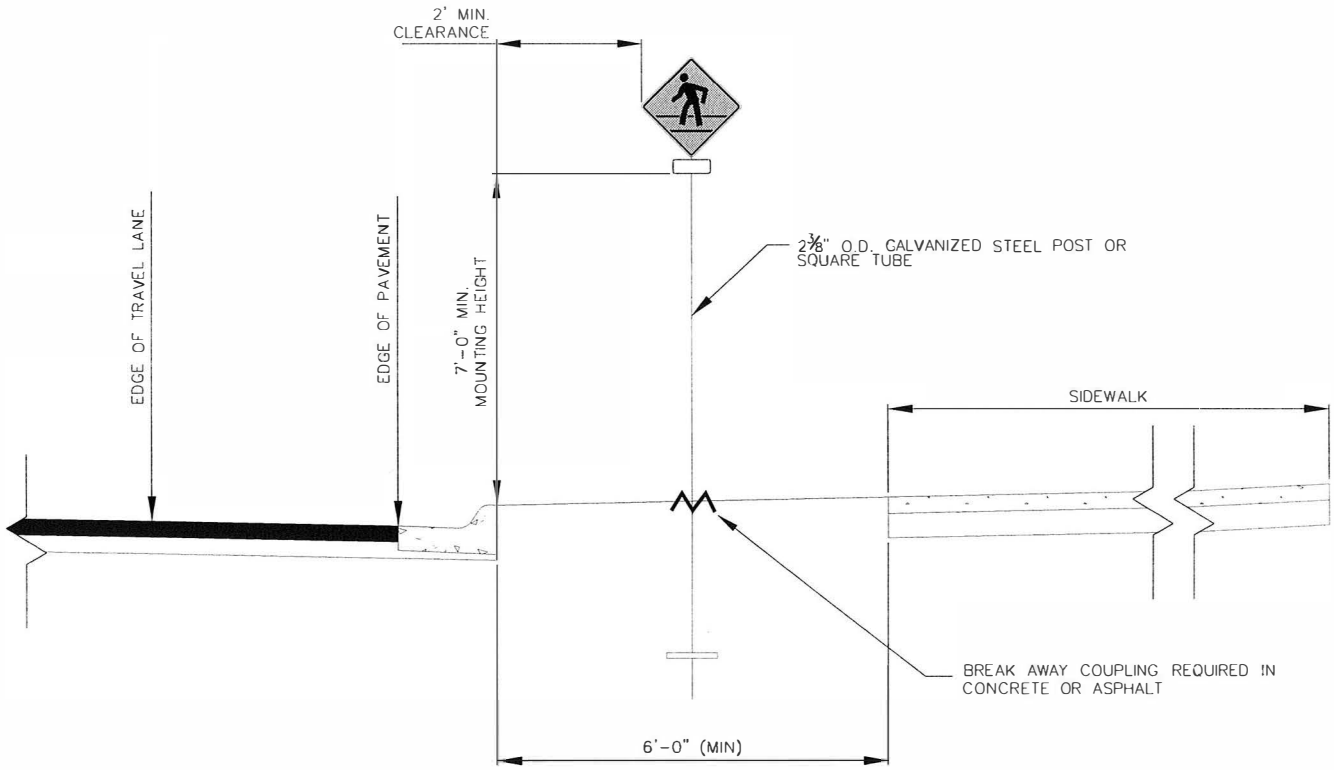

NOTES:

1. WELD TABS TO EACH SIDE OF STEEL TUBE TO ACHIEVE ANTI-SPIN BASE PLATE SIZE OR BOLT A 6" x 4" PLATE OF STEEL TO TUBE USING TWO ½" DIAMETER BOLTS. PLATE SHALL BE 4" FROM BOTTOM OF STEEL TUBE.
2. PLACE STOP SIGNS ADJACENT TO STOP BARS.
3. PLACE ALL SIGNS AT SPECIFIED CLEARANCES.

TYPICAL SIGN PLACEMENT

SCALE: NONE

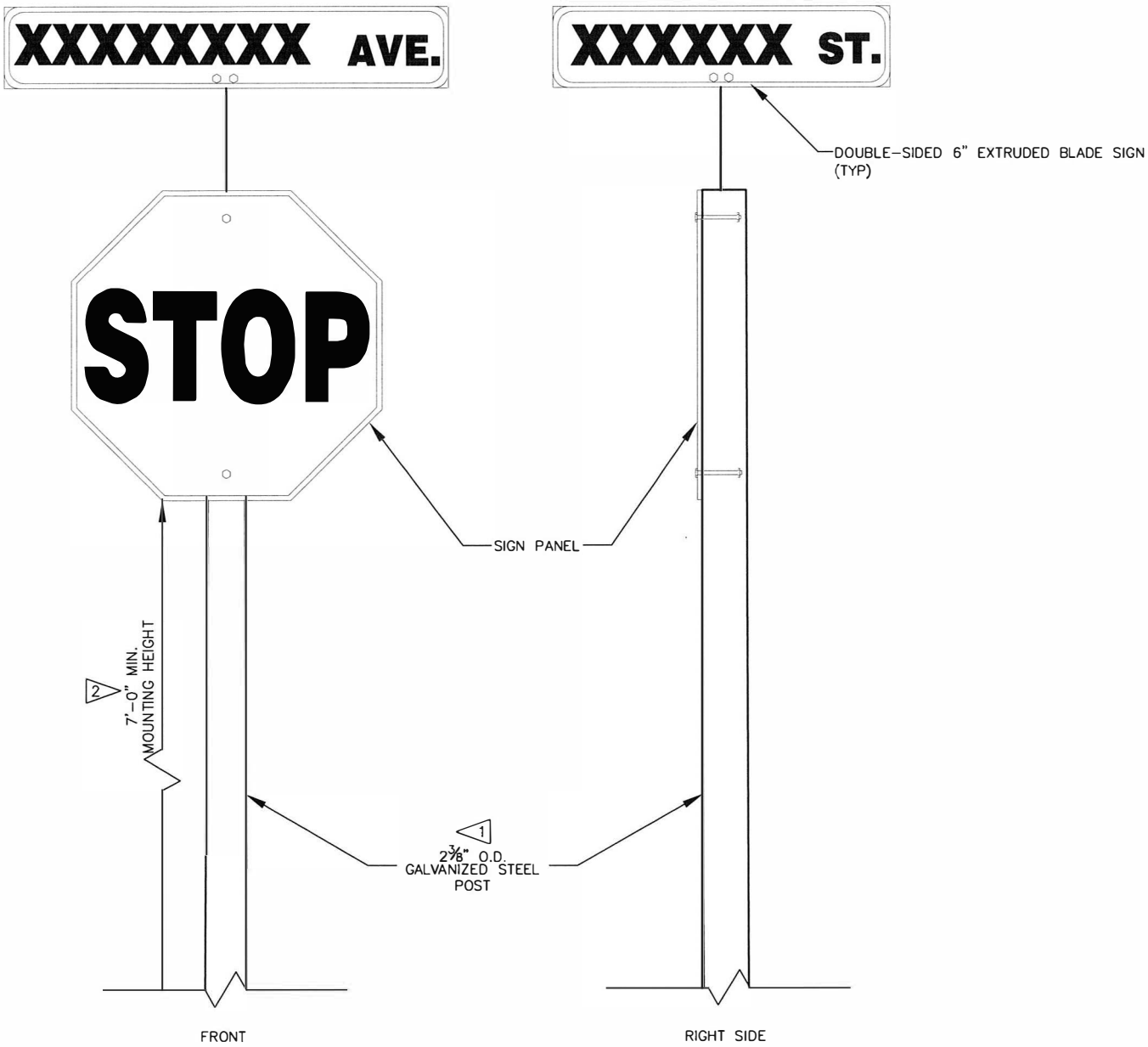

TYPICAL D-3 SIGN MOUNTING

SCALE: NONE

SIGN SPECIFICATIONS:

1. **THESE POSTS SHALL INCLUDE 3/8" WIDE RED/FLORESCENT YELLOW-GREEN POST REFLECTORS AS REQUIRED.**

2. **BOTTOM OF SIGN PER MUTCD. (7'-0" MIN.)**

3. STREET NAME SIGN BACKING SHALL BE 3M GREEN 3277 HIGH GRADE REFLECTIVE SHEETING OR APPROVED EQUAL.

4. STREET NAME SIGN LETTERING SHALL BE 3M WHITE 3290 HIGH GRADE REFLECTIVE SHEETING OR APPROVED EQUAL. LETTERING SHALL BE 6" HIGH IN CAPITAL LETTERS.

5. STREET NAME SIGNS SHALL BE ATTACHED TO THE TOP OF THE SIGN POST WITH A ROUND CAP SIGN HOLDER WITH A 6"-LONG MOUNTING BRACKET. A 6"-LONG 90 CROSSPIECE SHALL BE USED FOR DUAL SIGN APPLICATIONS.

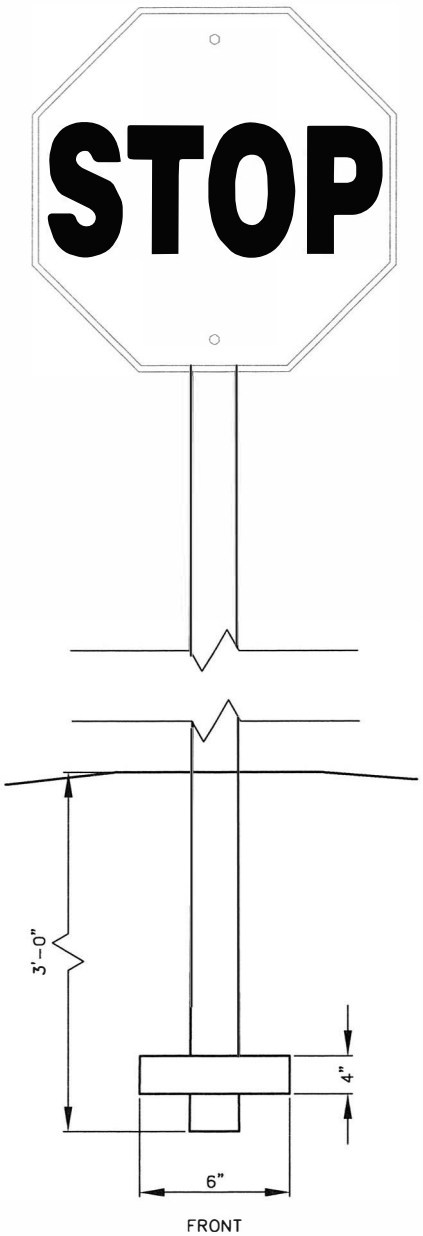

ANTI-SPIN BASE DETAIL

SCALE: NONE

SIGN SPECIFICATIONS

1. ALL SIGN BLANKS SHALL BE .080 GAUGE FLAT ALUMINUM STOCK.
2. STOP SIGN FACES SHALL BE 3M HIGH INTENSITY GRADE REFLECTIVE SHEETING OR APPROVED EQUAL.
3. ALL SIGN MATERIALS AND CONSTRUCTION PROCEDURES SHALL CONFORM TO THE 'STANDARD SPECIFICATIONS FOR ROAD AND BRIDGE CONSTRUCTION,' 1995 EDITION, DISTRIBUTED BY THE MONTANA DEPARTMENT OF TRANSPORTATION (MDT).
4. UNIFORM MANUAL NUMBERS ARE REFERENCED TO THE 'MANUAL OF UNIFORM TRAFFIC CONTROL DEVICES' BY THE FEDERAL HIGHWAYS ADMINISTRATION.

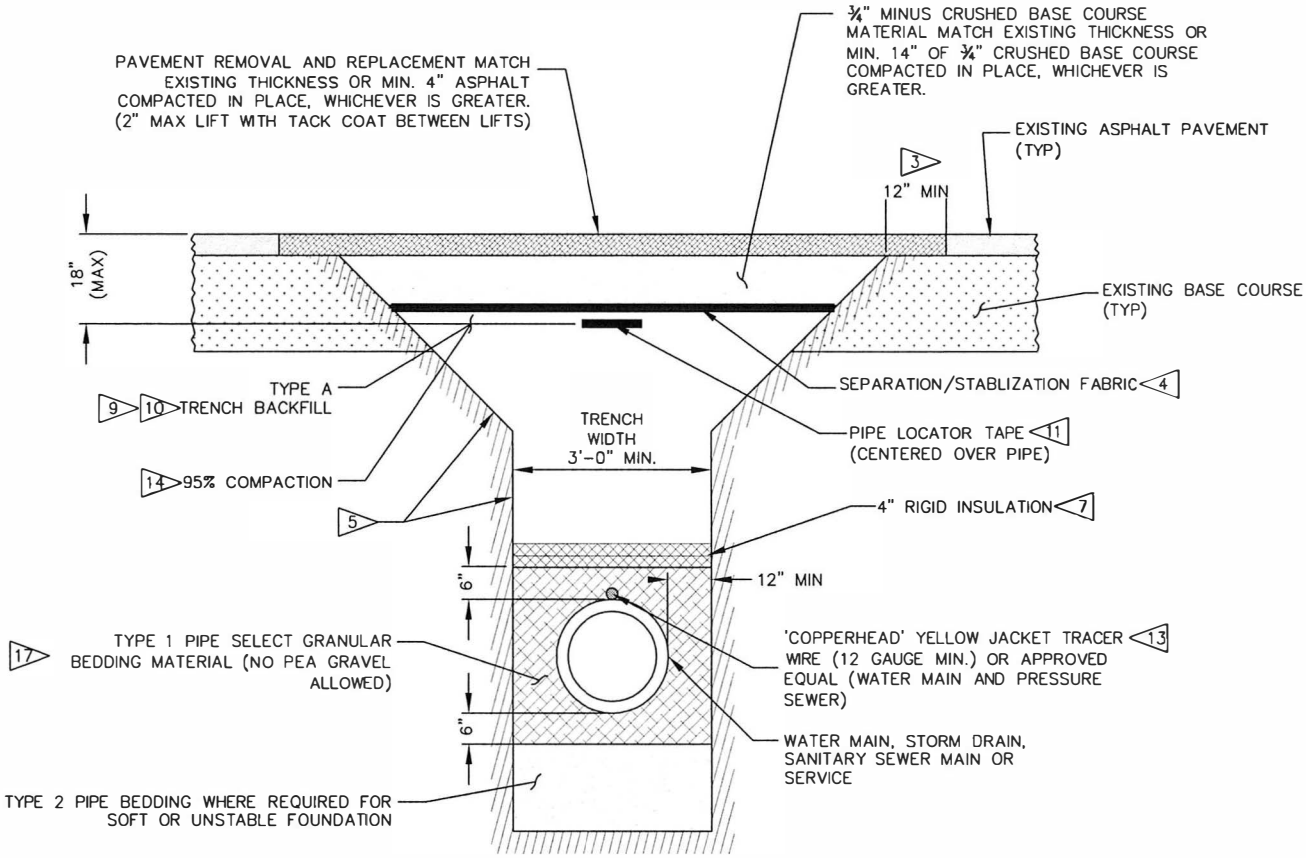

3 PAVED SURFACE

SCALE: NONE

GEOTEXTILE REPLACEMENT:

THE CONTRACTOR SHALL EXCAVATE TO STREET SUBGRADE AND EXPOSE THE GEOTEXTILE FABRIC WITHOUT DISTURBING IT. THE FABRIC SHALL BE CUT AND ROLLED BACK INTACT. A MINIMUM TWO FEET OF FABRIC SHALL BE EXPOSED ON EITHER SIDE OF THE CUT. THE FABRIC CUTS SHALL BE MADE WITH A SHARP KNIFE OR SCISSORS, RIPPING WITH A BACKHOE OR OTHER MACHINERY IS NOT ACCEPTABLE. AFTER PIPE BACKFILL, THE FABRIC SHALL BE PATCHED BY ONE OF THE FOLLOWING METHODS:

A. CONTRACTOR SHALL INSTALL NEW FABRIC. (AMOCO CEF 2006) WITH A MINIMUM OVERLAP OF 2' BEYOND ANY CUT MADE IN THE EXISTING FABRIC, OR

B. THE CONTRACTOR SHALL INSTALL NEW FABRIC (AMOCO CEF 2006) BY SEWING THE NEW FABRIC TO THE EXISTING FABRIC USING STITCHING METHODS APPROVED BY THE FABRIC MANUFACTURER.

THE PATCHING OF THE GEOTEXTILE FABRIC MUST BE INSPECTED BY THE CITY OF WHITEFISH PRIOR TO BACKFILLING

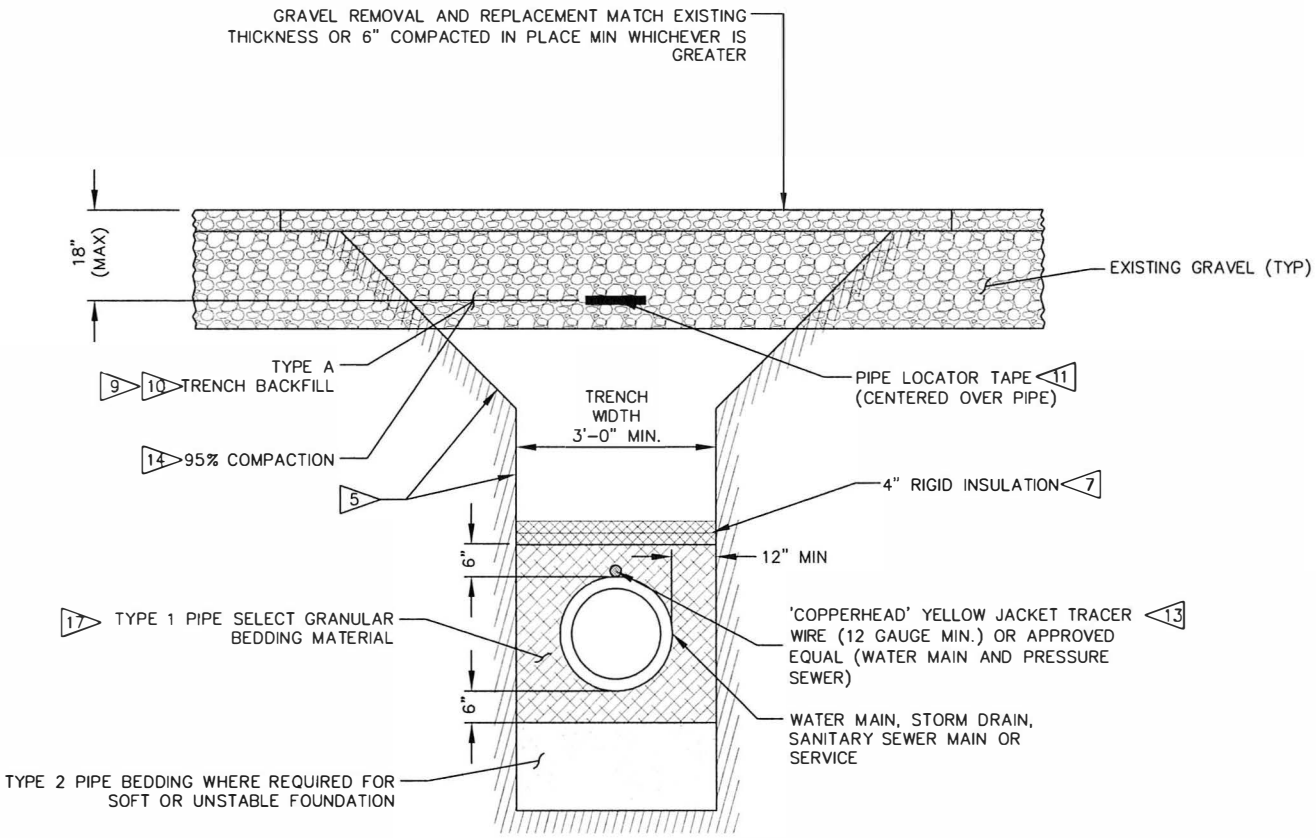

2 GRAVELED SURFACE

SCALE: NONE

CONSTRUCTION STANDARDS CITY OF WHITEFISH	PVC TRENCH BEDDING AND BACKFILL (GRAVELED SURFACE)	SD-19b

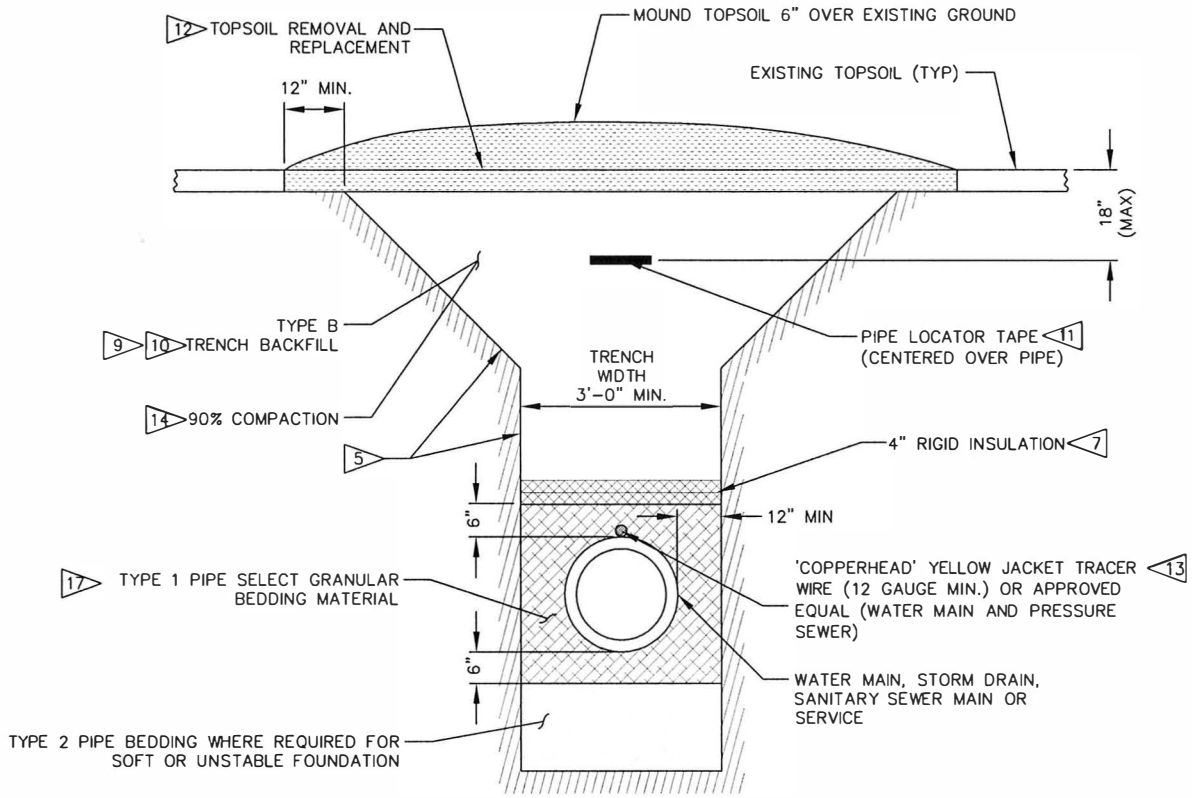

1 UNIMPROVED SURFACE

SCALE: NONE

CONSTRUCTION STANDARDS CITY OF WHITEFISH	PVC TRENCH BEDDING AND BACKFILL (UNIMPROVED SURFACE)	SD-19c

CONSTRUCTION NOTES:

1. WHERE TRENCH PASSES THROUGH EXISTING UNIMPROVED SOIL:
THE TOPSOIL SHALL BE REMOVED AND REPLACED A MINIMUM OF 12" FROM THE EDGE OF THE TRENCH OPENING.

2. WHERE TRENCH PASSES THROUGH EXISTING GRAVEL:
THE GRAVEL SHALL BE REMOVED AND REPLACED A MINIMUM OF 12" FROM THE EDGE OF THE TRENCH OPENING.

3. WHERE TRENCH PASSES THROUGH EXISTING PAVEMENT:
THE PAVEMENT SHALL BE CUT ALONG A NEAT VERTICAL LINE A MINIMUM OF 12" FROM THE EDGE OF THE TRENCH OPENING.

4. WHERE TRENCH PASSES THROUGH EXISTING PAVEMENT:
SAWCUT THE ASPHALT ALONG A NEAT VERTICAL LINE PER LIMITS SHOWN ON THE PLANS. WHERE SUITABLE TRENCH BACKFILL IS NOT USED, SEPARATION/STABILIZATION FABRIC AMOCO 2006 OR CONTECH C-300 GEOTEXTILE FABRIC, OR APPROVED EQUAL WILL BE USED.

5. TRENCH SHALL BE CONSTRUCTED TO OSHA SPECIFICATIONS FOR EXCAVATION, SECTION 1926, SUBPART B. DRAWINGS DO NOT SHOW TRENCH DIMENSIONS OR BACKSLOPES THAT MAY BE REQUIRED.

6. ALL SPOILS SHALL BE REMOVED AND DISPOSED OF AT AN APPROVED LOCATION.

7. INSTALL 4" OF WATER RESISTANT RIGID INSULATION THE FULL WIDTH OF THE TRENCH WHEN BURY TO TOP OF PIPE IS LESS THAN 6'-0" FOR WATER, 4'-0" FOR SEWER. (SHALL BE APPROVED BY CITY ENGINEER)

8. ALL ROCKS GREATER THAN 12" IN ANY DIMENSION SHALL BE HAULED OFF SITE AND DISPOSED OF PROPERLY.

9. NO ROCKS OR LUMPS LARGER THAN 2" IN ANY DIMENSION SHALL BE ALLOWED WITHIN 6" OF THE PIPE.

10. USE SUITABLE NATIVE MATERIAL FOR BACKFILL: WITH PRIOR APPROVAL OF THE CITY AND THE ENGINEER, ON-SITE EXCAVATED SOIL MAY BE USED TO BACKFILL WATER MAINS, WATER SERVICES, FIRE HYDRANT LEADS, SEWER MAINS AND SEWER SERVICES. BLOCKY OR PLATY CLAY, AND SATURATED OR NEAR SATURATED SOILS, WILL NOT BE PERMITTED FOR USE AS BACKFILL MATERIAL. BACKFILL MATERIAL SHALL BE PLACED IN 12-INCH MAXIMUM LOOSE LIFTS AND SHALL BE COMPACTED TO AT LEAST 95% OF THE MATERIAL'S MAXIMUM DRY DENSITY, AS DETERMINED BY AASHTO T-99 OR ASTM D698. NO ROCKS LARGER THAN 3", ANY DIMENSION, WILL BE PERMITTED IN FIRST LIFT OF BACKFILL. THE CONTRACTOR SHALL PROVIDE THE ENGINEER WITH A PROCTOR (MOISTURE-DENSITY RELATIONSHIP) FOR THE BACKFILL MATERIAL.

11. USE LABELED AND COLOR-CODED TAPE FOR THE APPROPRIATE UTILITY PIPE.

12. SEED, FERTILIZE, AND MULCH ALL DISTURBED AREAS WHICH ARE NOT PAVED, CONCRETED, GRAVELED, OR SODDED PER SPECIFICATIONS.

13. FOR WATER MAINS AND PRESSURE SEWERS; 'COPPERHEAD' YELLOW JACKET TRACER WIRE (12 GAUGE MIN.), OR APPROVED EQUAL, SHALL BE TAPED TO TOP OF ALL PLASTIC PIPE (PVC OR POLYETHYLENE) AND BROUGHT UP IN CONDUIT BEHIND FIRE HYDRANT AND COILED AT END OF SERVICE.

14. COMPACTION REFERS TO PERCENT OF MAXIMUM DENSITY DETERMINED BY A STANDARD PROCTOR. AASHTO T-99 OR AASHTO T-99.

15. FINISHED GRADE MUST MATCH THE ORIGINAL EXISTING GRADE WHERE PIPE IS INSTALLED UNLESS OTHERWISE NOTED.

16. VERIFY THAT COMPACTION METHODS ARE COMPATIBLE WITH PIPE MANUFACTURER'S RECOMMENDATIONS. ANY DAMAGE TO THE PIPE WILL BE THE CONTRACTOR'S RESPONSIBILITY.

17. SELECT TYPE 1 BEDDING-IN ADDITION TO THE SPECIFICATIONS IN MPWSS, PIPE BEDDING MATERIAL SHALL BE UNIFORMLY GRADED AS FOLLOWS:

SIEVE NO. OR SIZE	PERCENT PASSING (BY WEIGHT)
3/8"	100
#4	95-100
#8	80-100
#16	50-85
#30	25-60
#50	10-30
#100	2-10
#200	0-5

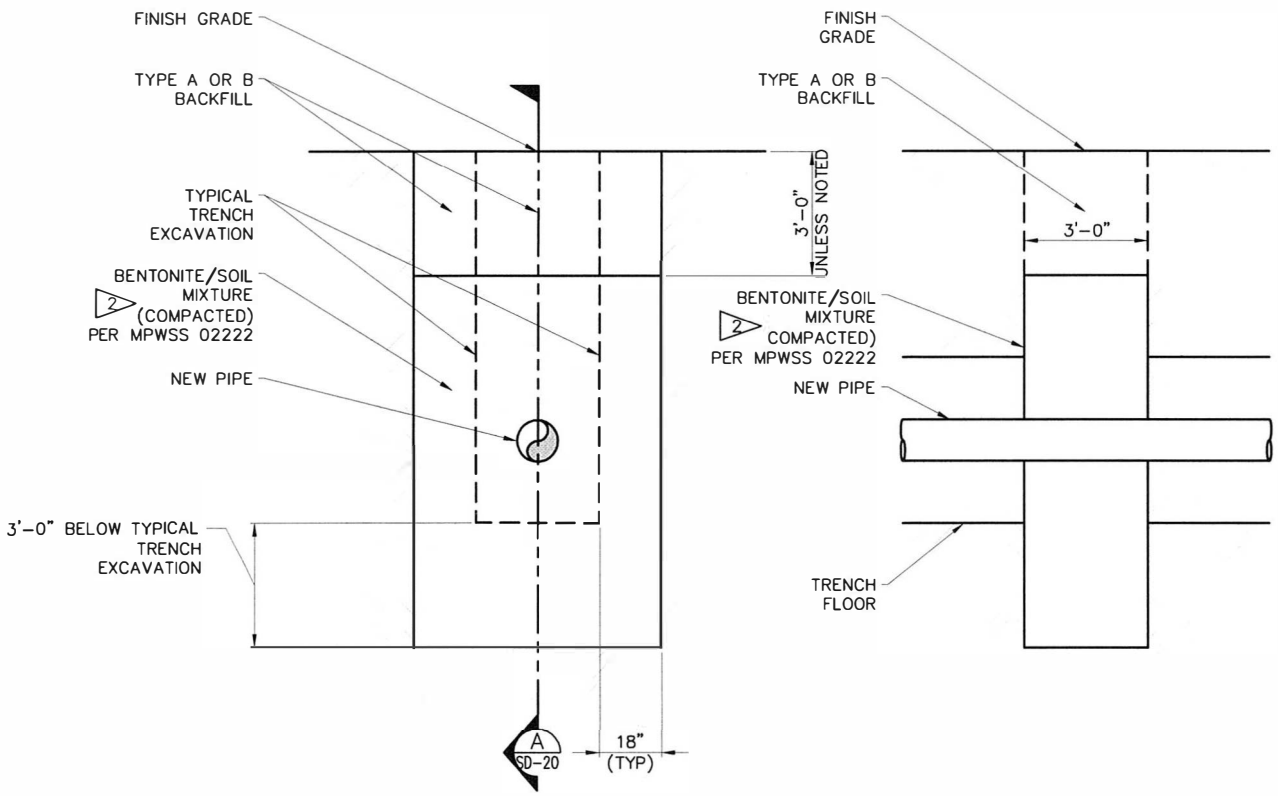

TRENCH PLUG
SCALE: NONE

TRENCH SECTION A
SCALE: NONE

TRENCH PLUG NOTES:

1. THE PURPOSE OF THE TRENCH WATER STOP IS TO PREVENT TYPE 1 & TYPE 2 BEDDING FROM BECOMING A CONDUIT FOR GROUNDWATER.

2. THE CONTRACTOR SHALL PROVIDE THE MIXTURE PROPORTIONING OF THE BENTONITE MATERIAL WITH ON-SITE LEAN CLAYS. ALL TRENCH WATER STOPS SHALL BE CONSTRUCTED TO HAVE AN IN-PLACE PERMEABILITY RATE OF 1x10-7CM/SECOND OR LESS. THE CONTRACTOR SHALL SUBMIT A MIX PROPORTION DESIGN & CERTIFIED TESTING RESULTS FROM A PROFESSIONAL LAB INDICATING THE CONFORMANCE WITH THIS PERMEABILITY RATE.

3. TRENCH WATER STOPS SHALL BE INSTALLED AT A MINIMUM OF 100'-0" APART, OR CROSSING OF STREAMS, DITCHES, OR OTHER SOURCES OF GROUNDWATER. TRENCH PLUGS SHALL BE INSTALLED WITHIN 10'-0" UPSTREAM OF ALL SANITARY SEWER MANHOLES. WHEN DIRECTED BY THE ENGINEER, TRENCH WATER STOPS SHALL ALSO BE INSTALLED ALONG SERVICE UTILITY TRENCHES.

4. TRENCH PLUGS ARE REQUIRED ON ALL SANITARY SEWER MAINS.

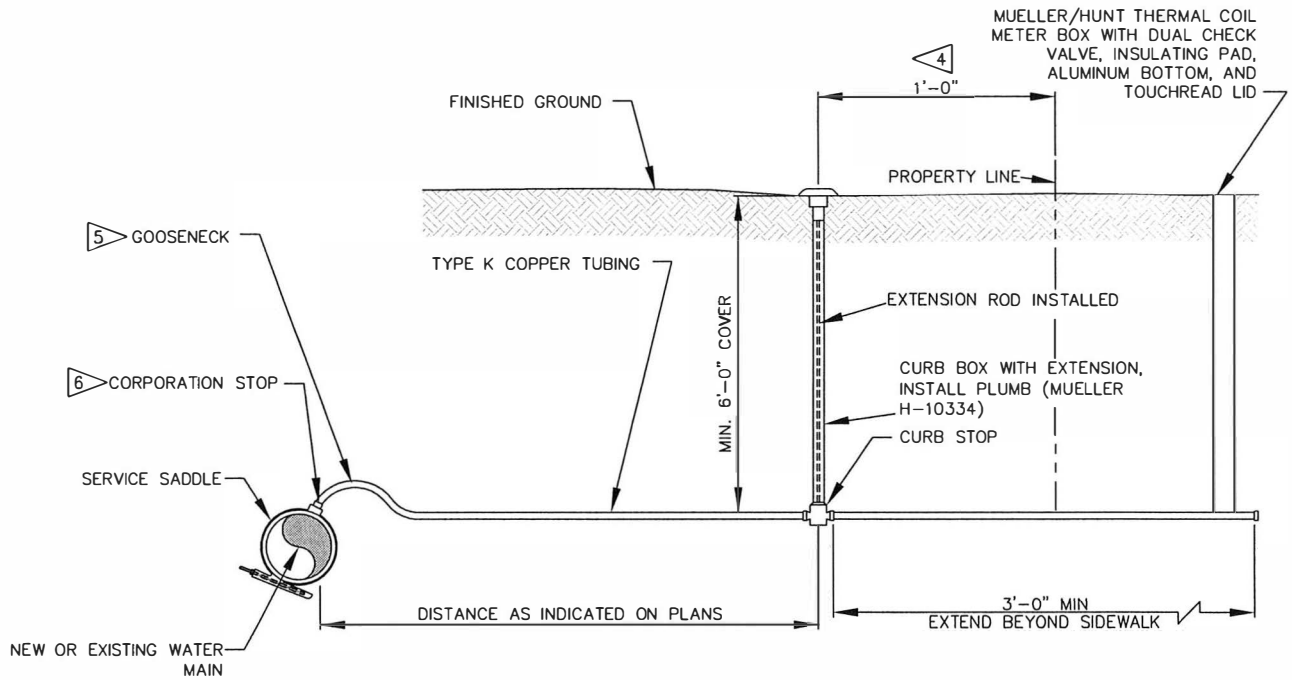

WATER SERVICE

SCALE: NONE

NOTES:

1. THIS DETAIL APPLIES TO SERVICES THAT ARE 2" IN DIAMETER OR SMALLER. SERVICE LINES OVER 2" ARE INSTALLED SIMILAR TO WATER MAINS.
2. WATER SERVICE LINES SHALL BE CONNECTED/INSTALLED WHERE SHOWN ON THE DRAWINGS OR AS SPECIFIED.
3. BEDDING MATERIAL WITHIN 6-INCHES OF THE SERVICE LINE SHALL BE TYPE 1 PIPE BEDDING.
4. THE CURB BOX SHALL BE INSTALLED 1'-0" FROM THE PROPERTY LINE OR WHERE SHOWN ON THE DRAWINGS. WHERE A SIDEWALK IS ADJACENT TO THE PROPERTY LINE, INSTALL CURB BOX IN THE CENTER OF THE BOULEVARD.
5. THE GOOSENECK IN THE SERVICE LINE AT THE CONNECTION TO THE CORPORATION STOP SHALL BE MADE IN THE HORIZONTAL PLANE WHEN POSSIBLE.
6. THE CORPORATION SHALL BE TAPPED AT 45° VERTICAL ANGLE ON THE PIPE (MEASURED FROM THE HORIZONTAL).
7. CONCRETE AND/OR PAVEMENT REMOVAL AND REPLACEMENT SHALL BE PROVIDED AS NECESSARY.
8. MINIMUM 6'-0" COVER SHALL BE MAINTAINED ALONG THE ENTIRE SERVICE LINE.
9. WHEN A 'WATER SERVICE' IS CALLED OUT THE CONTRACTOR SHALL PLACE THE ENTIRE SERVICE, FROM THE MAIN TO THE PROPOSED CURB STOP LOCATION. THIS INSTALLATION INCLUDES NEW CORPORATION STOP, SERVICE SADDLE, TUBING, CURB STOP, CURB STOP BOX, AND EXTENSION ROD.

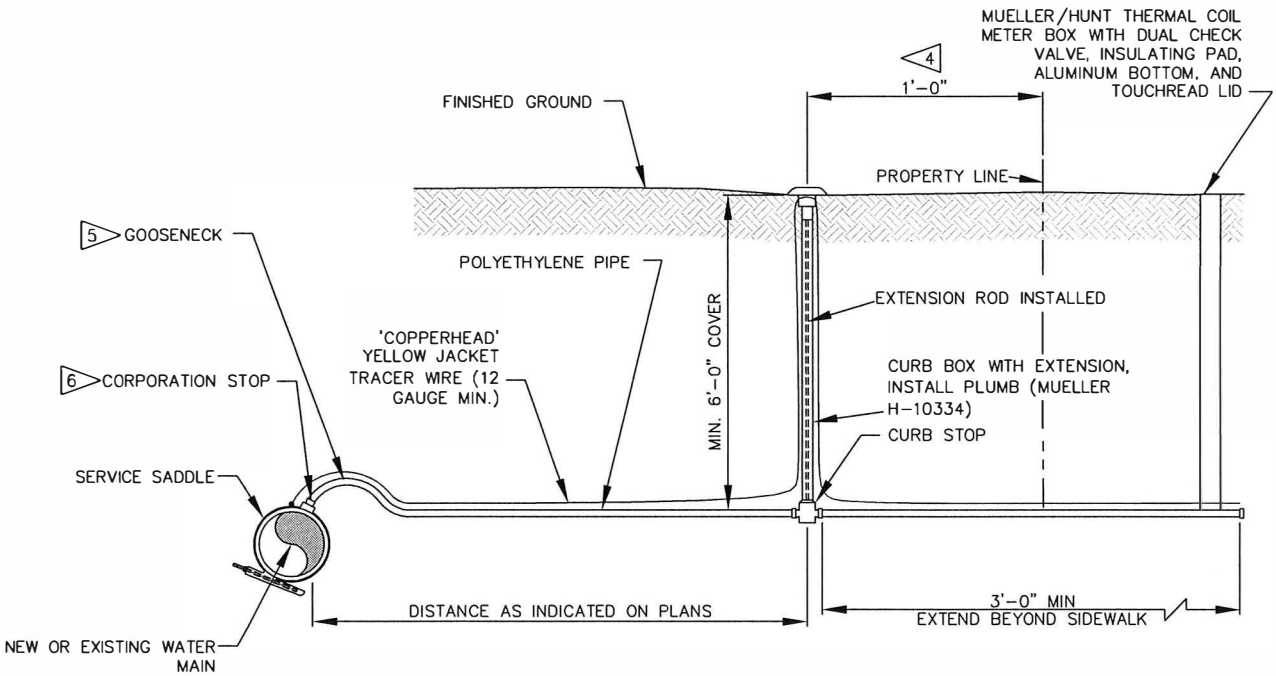

WATER SERVICE

SCALE: NONE

NOTES:

1. THIS DETAIL APPLIES TO SERVICES THAT ARE 2" IN DIAMETER OR SMALLER. SERVICE LINES OVER 2" ARE INSTALLED SIMILAR TO WATER MAINS.
2. WATER SERVICE LINES SHALL BE CONNECTED/INSTALLED WHERE SHOWN ON THE DRAWINGS OR AS SPECIFIED.
3. BEDDING MATERIAL WITHIN 6-INCHES OF THE SERVICE LINE SHALL BE TYPE 1 PIPE BEDDING.
4. THE CURB BOX SHALL BE INSTALLED 1'-0" FROM THE PROPERTY LINE OR WHERE SHOWN ON THE DRAWINGS. WHERE A SIDEWALK IS ADJACENT TO THE PROPERTY LINE, INSTALL CURB BOX IN THE CENTER OF THE BOULEVARD.
5. THE GOOSENECK IN THE SERVICE LINE AT THE CONNECTION TO THE CORPORATION STOP SHALL BE MADE IN THE HORIZONTAL PLANE WHEN POSSIBLE.
6. THE CORPORATION SHALL BE TAPPED AT 45° VERTICAL ANGLE ON THE PIPE (MEASURED FROM THE HORIZONTAL).
7. CONCRETE AND/OR PAVEMENT REMOVAL AND REPLACEMENT SHALL BE PROVIDED AS NECESSARY.
8. MINIMUM 6'-0" COVER SHALL BE MAINTAINED ALONG THE ENTIRE SERVICE LINE.
9. WHEN A 'WATER SERVICE' IS CALLED OUT THE CONTRACTOR SHALL PLACE THE ENTIRE SERVICE, FROM THE MAIN TO THE PROPOSED CURB STOP LOCATION. THIS INSTALLATION INCLUDES NEW CORPORATION STOP, SERVICE SADDLE, TUBING, CURB STOP, CURB STOP BOX, AND EXTENSION ROD.
10. PLUMBER NEEDS TO CONTINUE TRACER WIRE TO HOUSE AND TERMINATE AT HOUSE FOOTING WITH LB ENCLOSURE.

NOTES:

1. INSTALL HYDRANT WITH PUMPER NOZZLE FACING STREET UNLESS OTHERWISE DIRECTED BY FIELD ENGINEER.
2. HYDRANTS SHALL BE PLACED IN THE CENTER OF BOULEVARDS, WHERE APPLICABLE OR A MINIMUM OF 5' FROM EDGE OF PAVEMENT WHERE THERE IS NO CURB AND GUTTER.
3. PROVIDE BOTH MECHANICAL JOINT THRUST RESTRAINT AND CONCRETE THRUST BLOCKING ON THE TEE, VALVE, AND HYDRANT.
4. TAP EXISTING WATER MAIN WITH 6" TAPPING SLEEVE FOR NEW HYDRANTS ON EXISTING WATER MAINS.
5. WRAP ALL DIRECT BURY CAST IRON OR DUCTILE IRON PIPE AND FITTINGS INCLUDING HYDRANTS, VALVE BOXES, CURB BOXES, AND ALL OTHER METAL PARTS AND SURFACES, IN POLYETHYLENE ENCASEMENT.
6. 'COPPERHEAD' YELLOW JACKET TRACER WIRE (12 GAUGE MIN.), OR APPROVED EQUAL, SHALL BE TAPED TO TOP OF ALL PIPE AND BROUGHT UP 1" CONDUIT AS SHOWN.
7. TONING WIRE WILL BE RUN UP BACK OF THE HYDRANT INSTALLED IN 1" CONDUIT WITH LB ENCLOSURE AT THE TOP. WIRE WILL ALSO GO TO THE CURB BOX. TONING WIRE WILL NOT BE RUN UP THE MAIN VALVE, CAN BOX, OR AUXILIARY VALVE BOXES.
8. WIRE CONNECTOR WILL BE LUG TYPE WITH SILICON. MAIN LINE WIRE WILL NOT BE CUT. TYPE: DRYCON OR EQUAL.

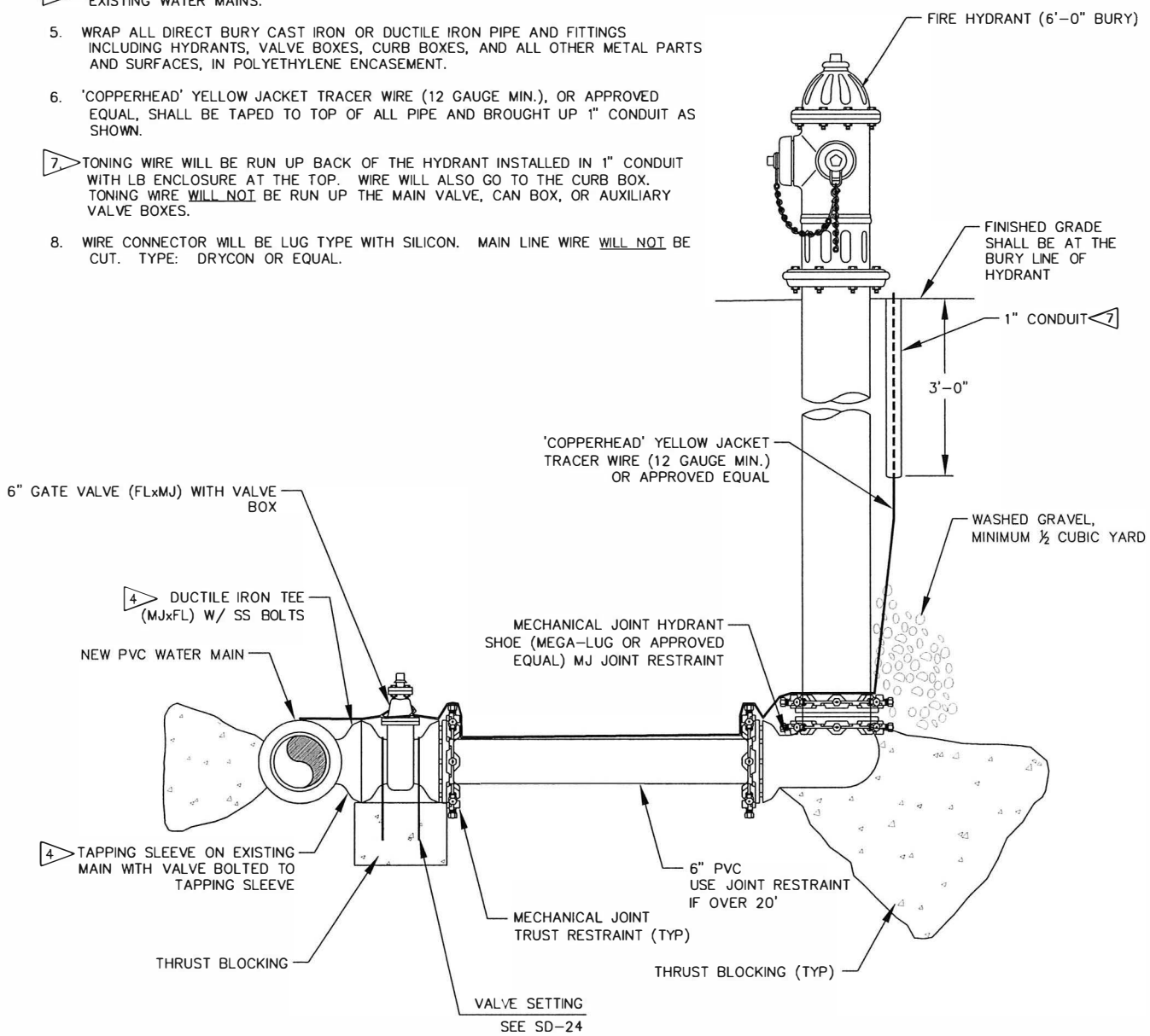

FIRE HYDRANT

SCALE: NONE

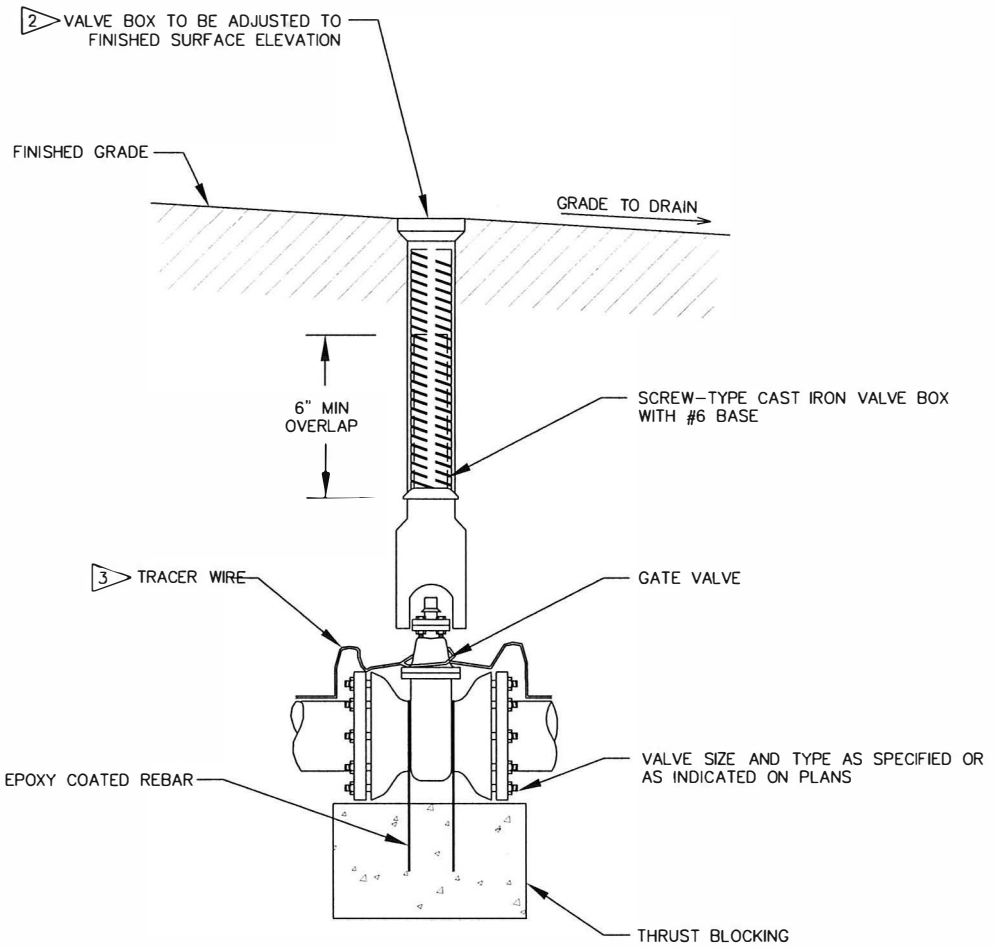

NOTES:

1. THIS DETAIL APPLIES TO ALL BURIED VALVES.

2 ADJUST VALVE BOX TO BE ¼", ±⅛", BELOW FINISHED PAVEMENT/CONCRETE SURFACE. MAKE FINAL ADJUSTMENTS PRIOR TO PAVING.

3 'COPPERHEAD' YELLOW JACKET TRACER WIRE (12 GAUGE MIN.) OR APPROVED EQUAL.

VALVE SETTING

SCALE: NONE

CONSTRUCTION STANDARDS CITY OF WHITEFISH	VALVE SETTING	SD-24

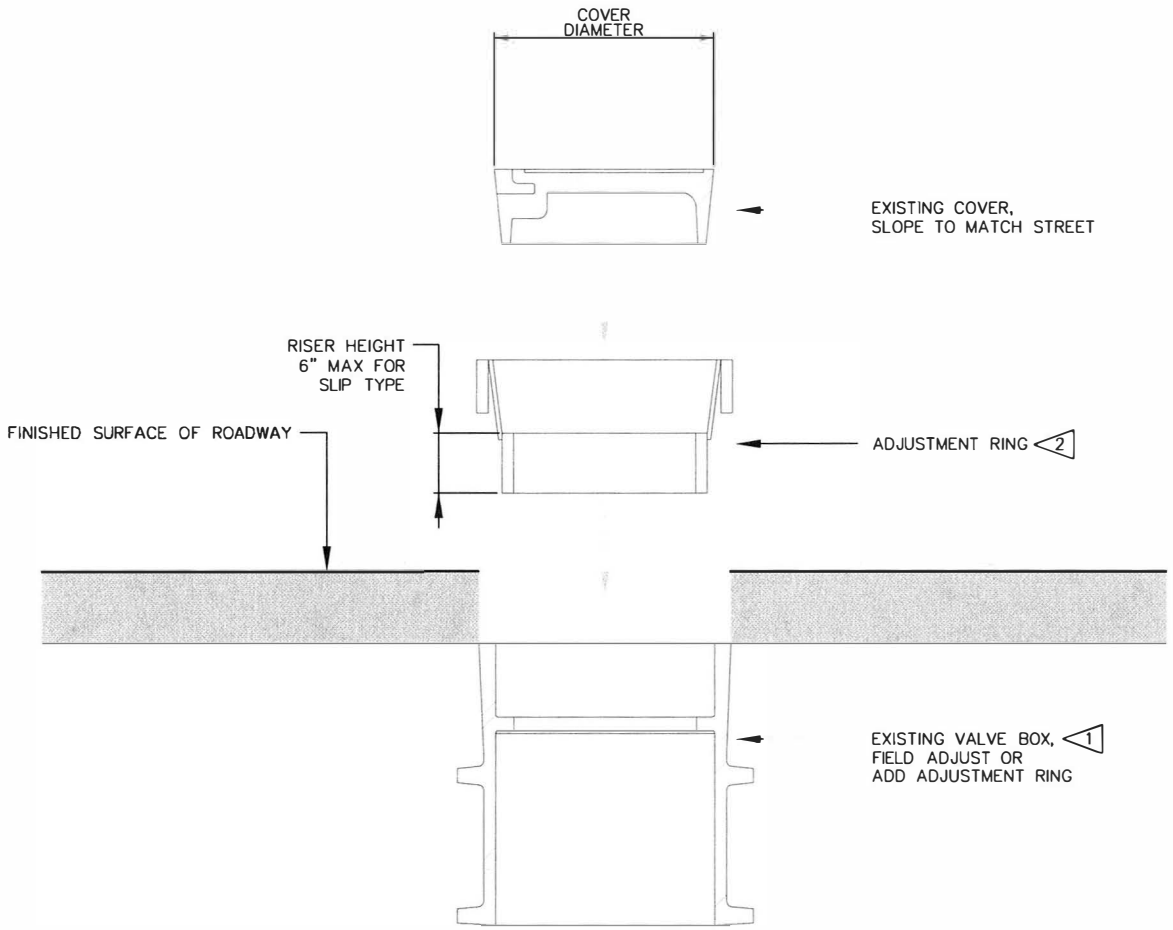

NOTES:

1. THE PREFERRED METHOD FOR FIELD ADJUSTMENT IS BY 'SCREWING' VALVE BOX. IF CONTRACTOR IS UNABLE TO ADJUST BY 'SCREWING' VALVE BOX, AN ADJUSTMENT RING WILL BE REQUIRED.
2. ADJUSTMENT RING SIZE/THICKNESS SHALL BE VERIFIED BY CONTRACTOR PRIOR TO ORDERING.
3. FINISHED VALVE BOX COVER SHALL BE 1/8" TO 1/4" (MAXIMUM) LOWER THAN FINISHED SURFACE.

VALVE BOX ADJUSTMENT

SCALE: NONE

SERVICE FROM MAIN

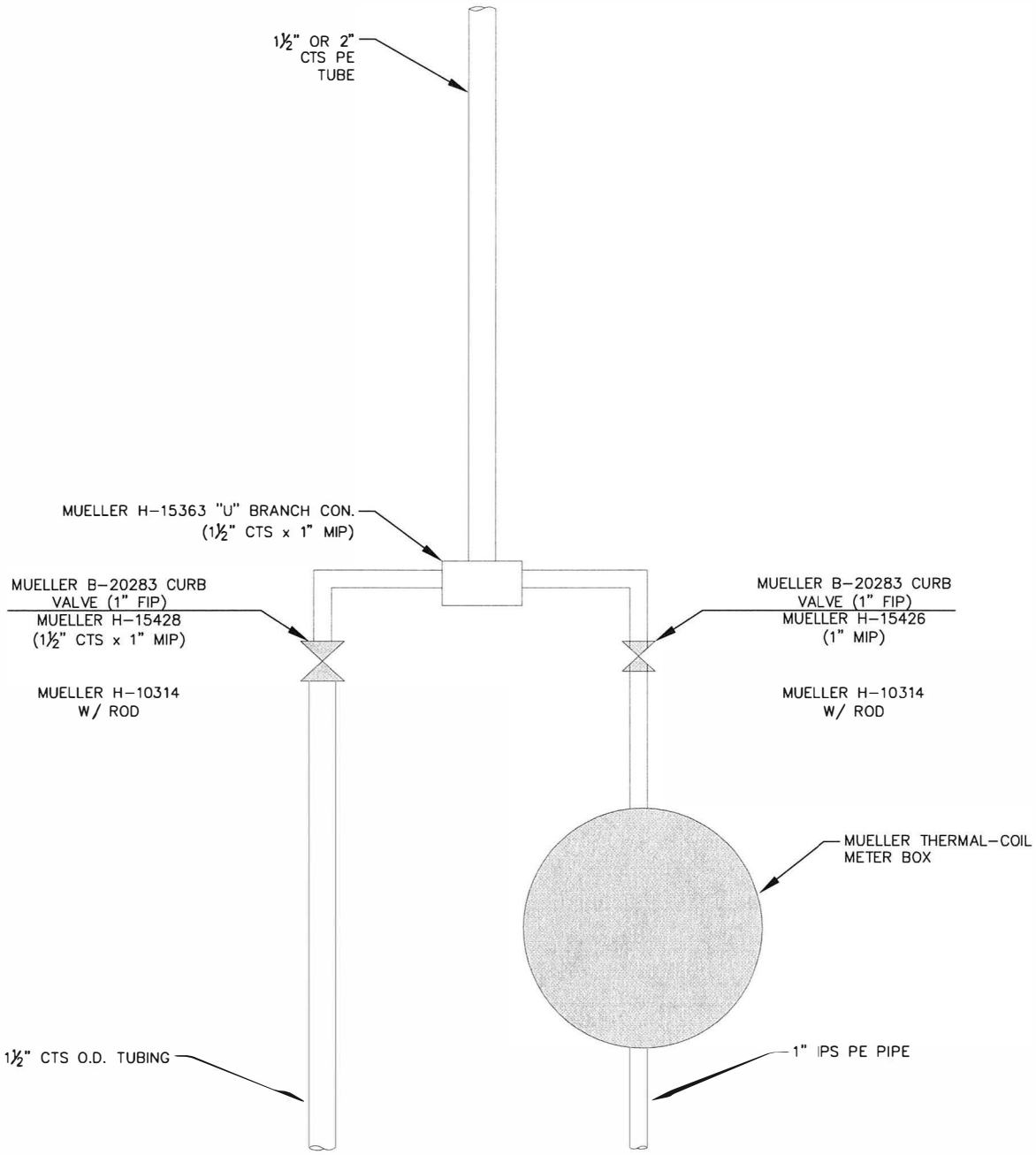

FIRE SERVICE DOMESTIC SERVICE

TYPICAL METER BOX SPECIFICATION:
LOCKWING FULL PORT ANGLE BALL VALVE INLET
A.S.S.E. DUAL CHECK VALVE OUTLET
ATTACHED ALUMINUM BASE
SIDE LOCKING LID
72" DEPTH
INSULATING PAD

CONSTRUCTION STANDARDS CITY OF WHITEFISH	RESIDENTIAL SERVICE WITH FIRE SPRINKLER SYSTEM	SD-26

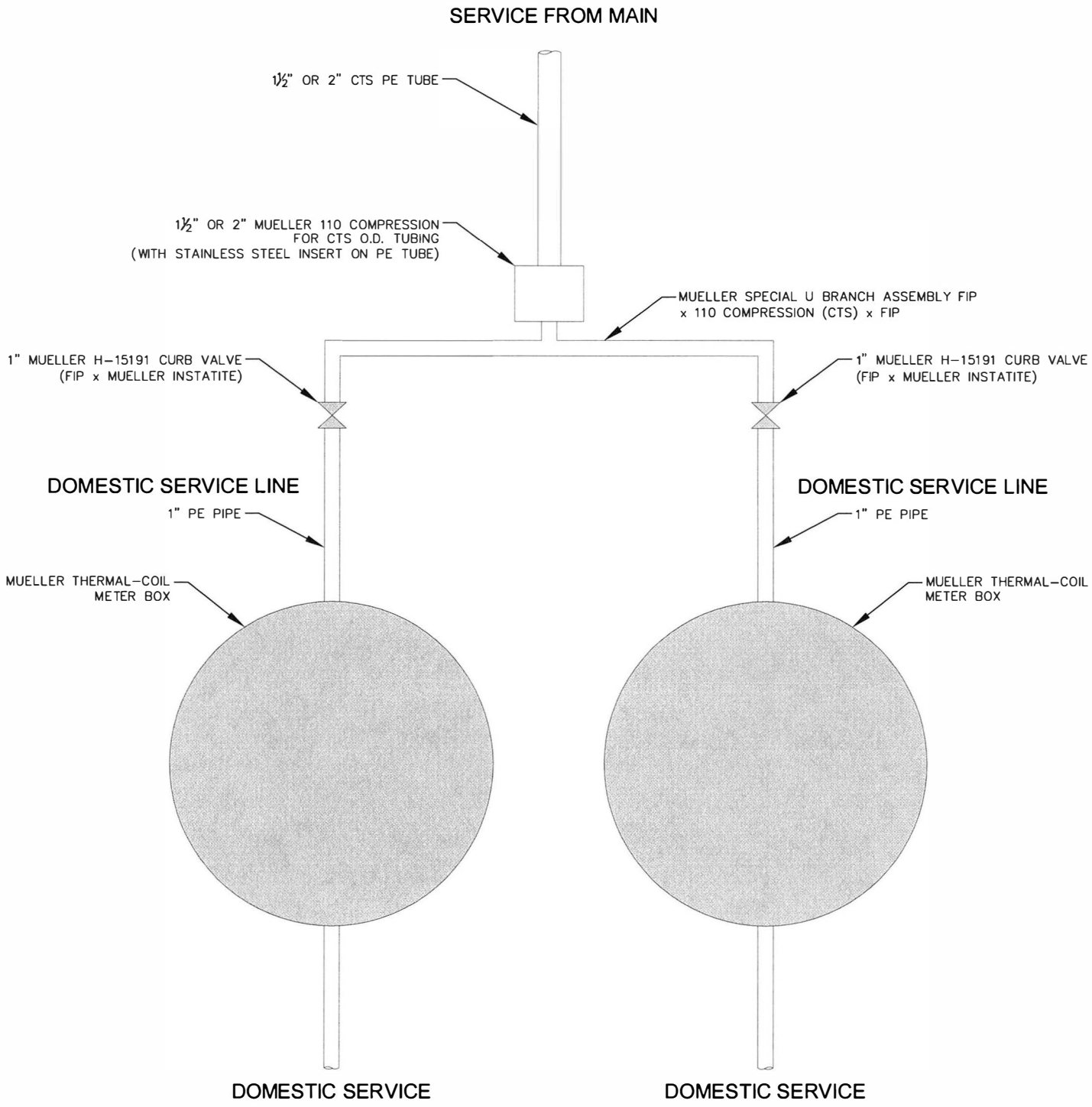

CONSTRUCTION STANDARDS CITY OF WHITEFISH	MULTIFAMILY RESIDENTIAL SERVICES > 25 FIXTURE UNITS	SD-27

TYPICAL METER BOX SPECIFICATION:

LOCKWING FULL PORT ANGLE BALL VALVE INLET
A.S.S.E. DUAL CHECK VALVE OUTLET
ATTACHED ALUMINUM BASE
SIDE LOCKING LID
72" DEPTH
INSULATING PAD

SERVICE FROM MAIN

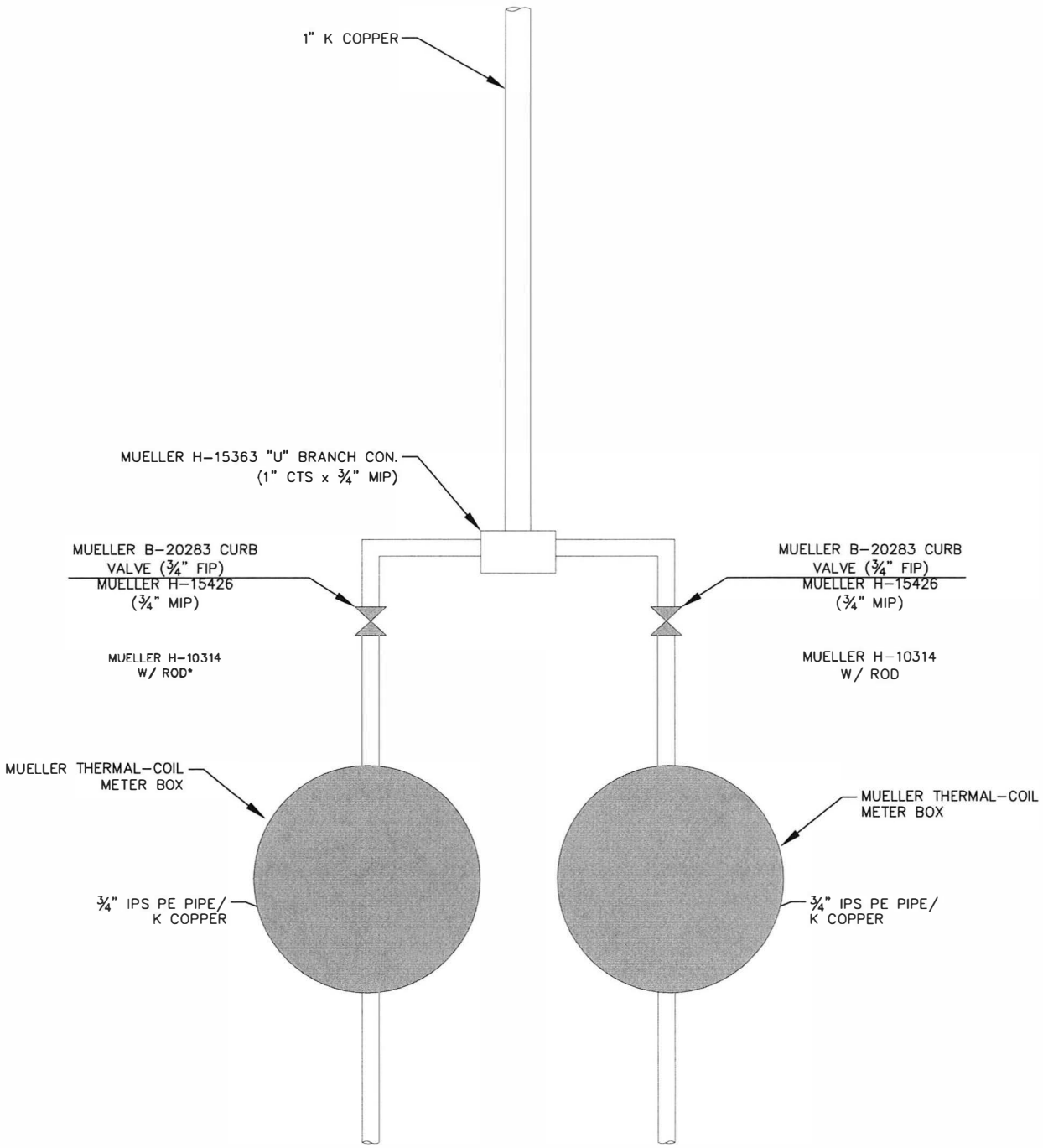

DOMESTIC SERVICE DOMESTIC SERVICE

*USE MUELLER H-10334 FOR PLACEMENT
IN CONCRETE FOR DRIVEWAYS.

CONSTRUCTION STANDARDS CITY OF WHITEFISH	MULTIFAMILY RESIDENTIAL SERVICES < 25 FIXTURE UNITS	SD-28

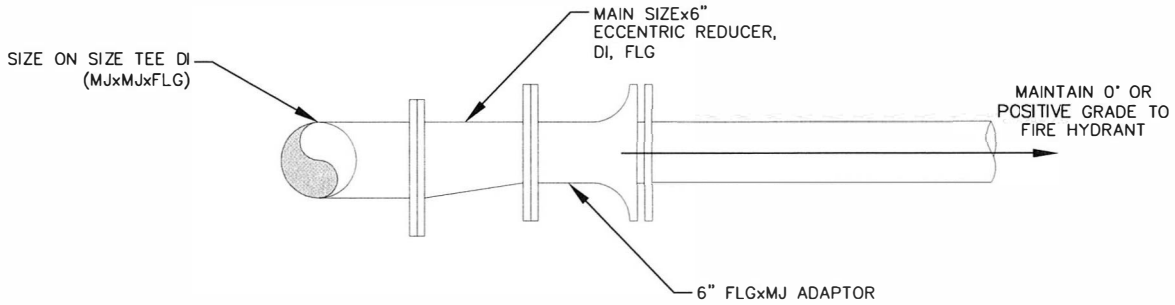

AIR RELEASE HYDRANT FITTINGS ELEVATION VIEW

SCALE: NONE

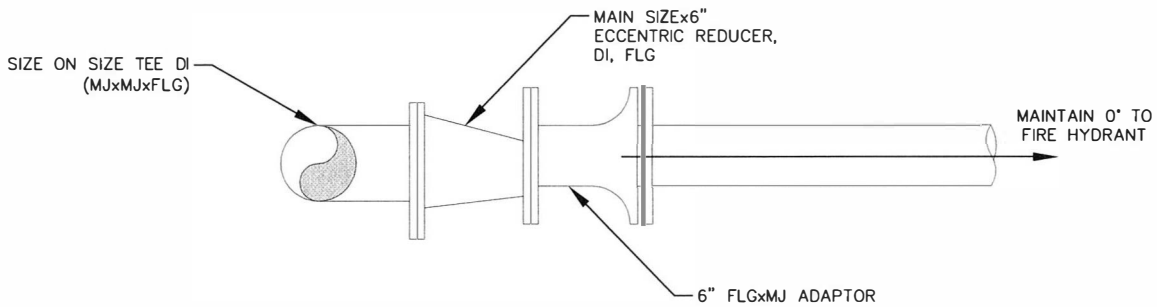

BLOWOFF FIRE HYDRANT ELEVATION VIEW

SCALE: NONE

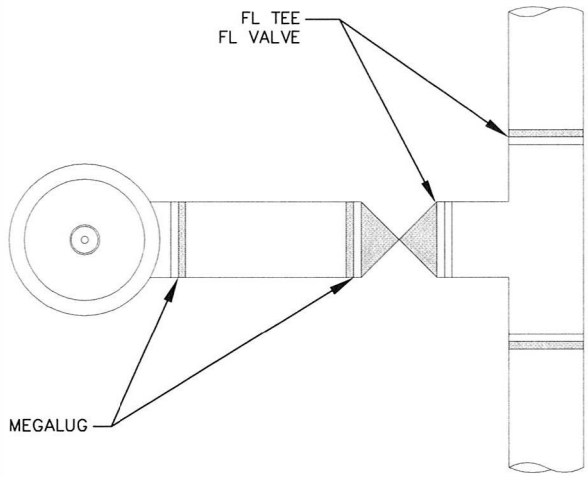

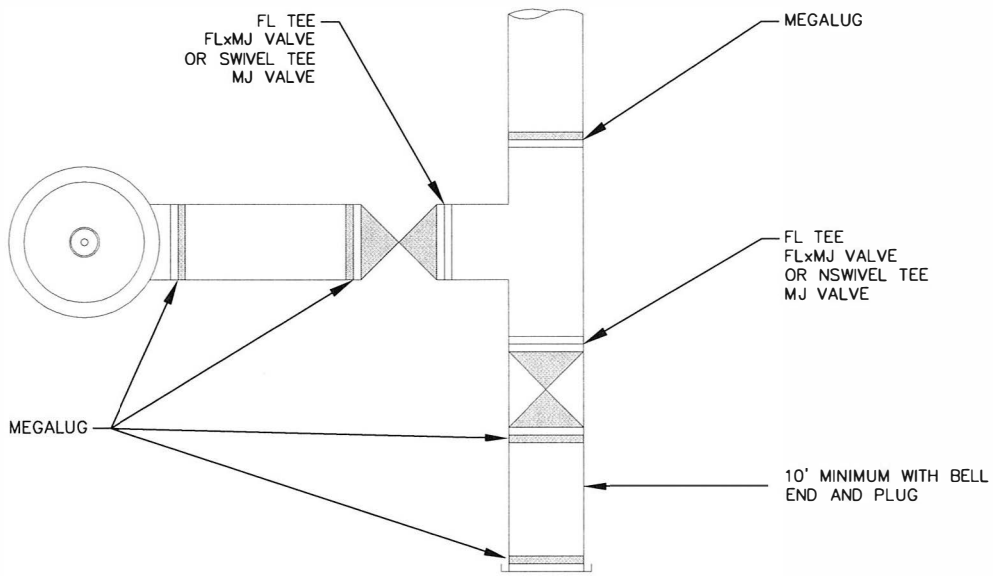

END OF MAIN

JOINT RESTRAINTS

SCALE: NONE

NOTE:

THRUST BLOCKS ARE REQUIRED FOR JOINT RESTRAINTS. IN ADDITION MEGALUGS ARE REQUIRED AS SHOWN ABOVE. MEGALUGS CAN BE USED TO REPLACE THE FLANGE TEE AND FLANGE VALVE SHOWN IN BOTH EXAMPLES.

CONSTRUCTION STANDARDS CITY OF WHITEFISH	FIRE HYDRANT AND END OF MAIN JOINT RESTRAINTS	SD-30

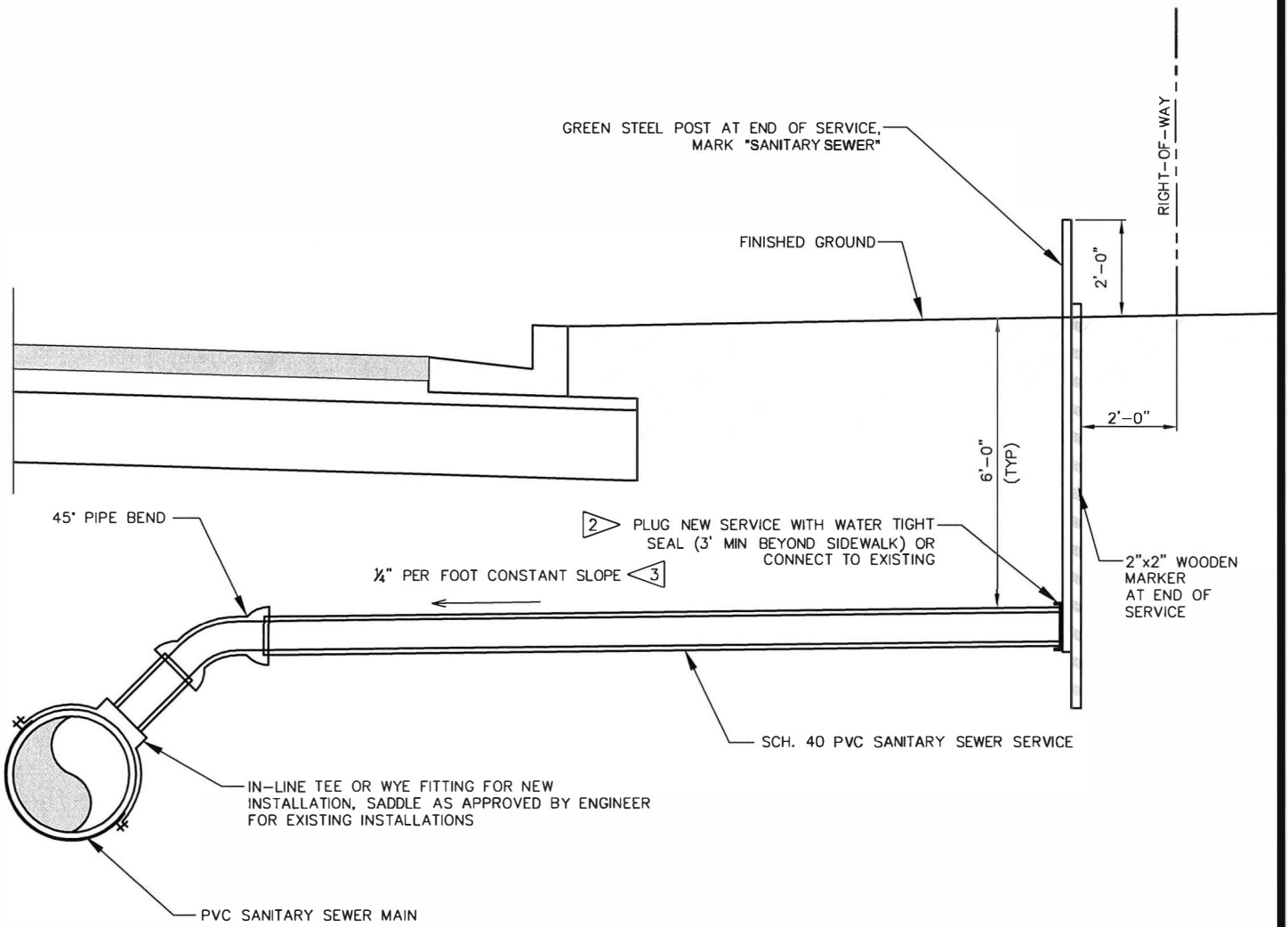

CONSTRUCTION NOTES:

1. ACTUAL DEPTH OF BURY FOR EACH SERVICE VARIES.
2. CONTRACTOR SHALL PROVIDE ALL FITTINGS AND PIPING AS NECESSARY TO CONNECT TO THE EXISTING SANITARY SEWER LATERALS.
3. MATCH EXISTING SANITARY SEWER SERVICE SLOPE FOR ALL SERVICE CONNECTIONS.
4. ALL BACKFILL SHALL BE TYPE A UNLESS OTHERWISE NOTED.
5. SERVICE CONNECTION SHALL MEET ALL REQUIREMENTS OF THE INTERNATIONAL PLUMBING CODE, INCLUDING REQUIRED CLEANOUTS.

SANITARY SEWER SERVICE

SCALE: NONE

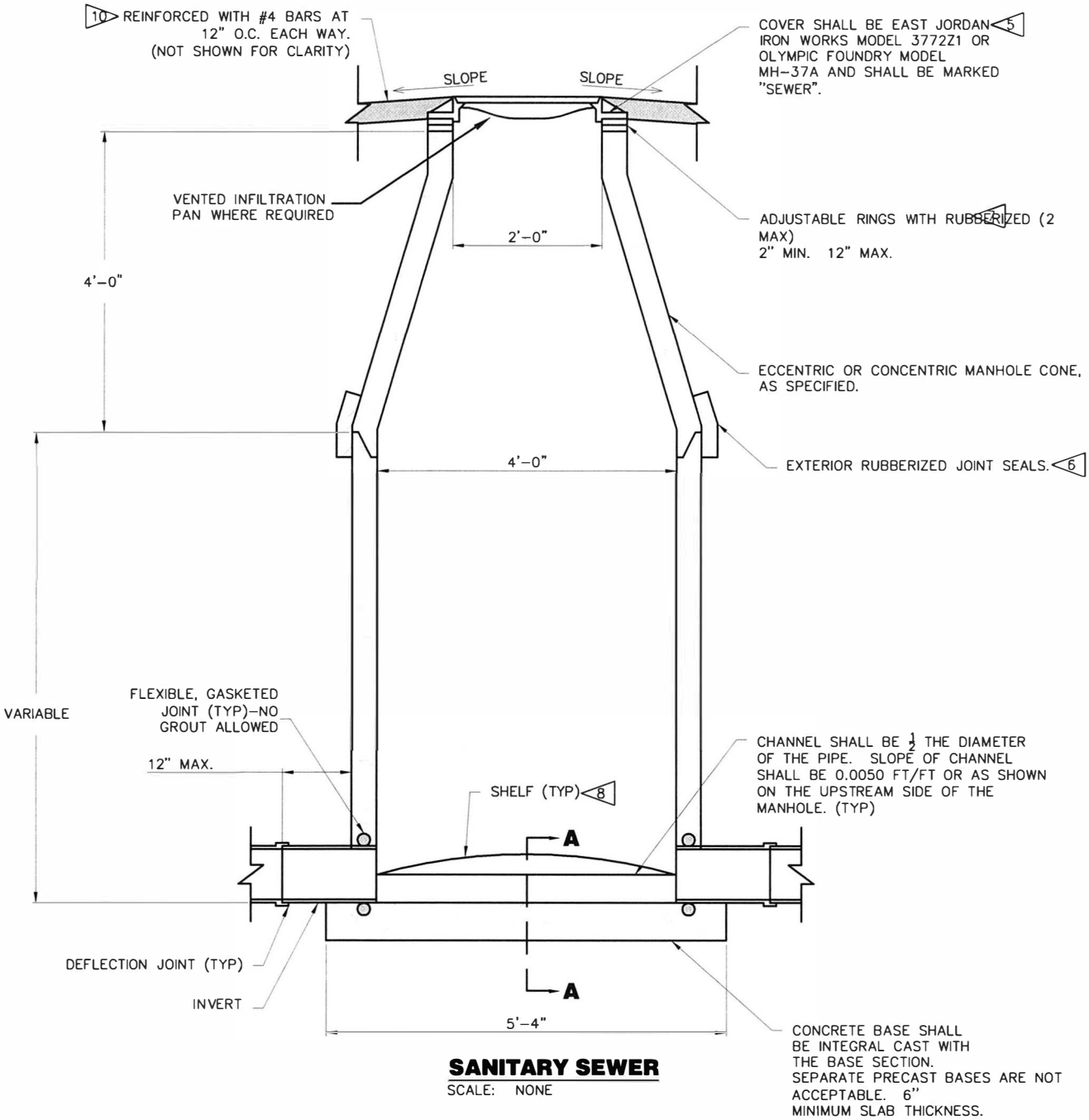

SANITARY SEWER

SCALE: NONE

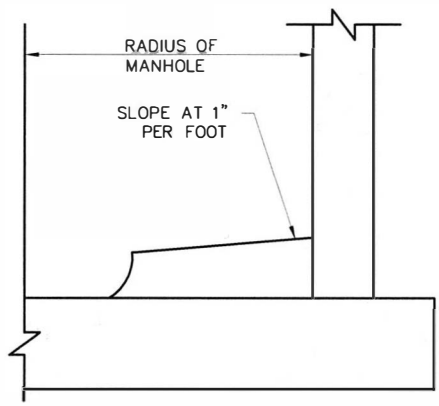

SECTION "A-A"

SCALE: NONE

CONSTRUCTION STANDARDS CITY OF WHITEFISH	SANITARY SEWER MANHOLE	SD-32a

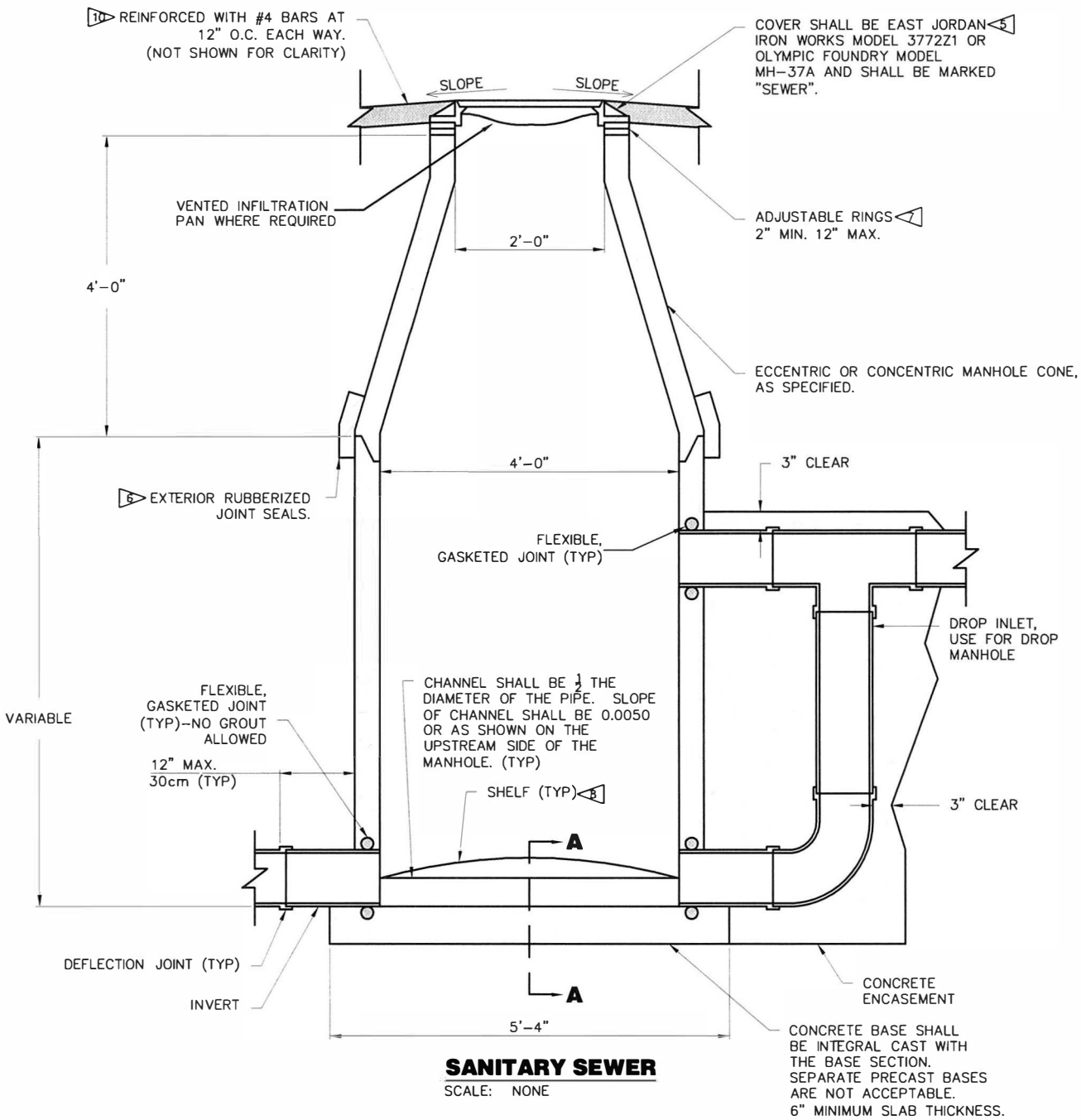

SANITARY SEWER

SCALE: NONE

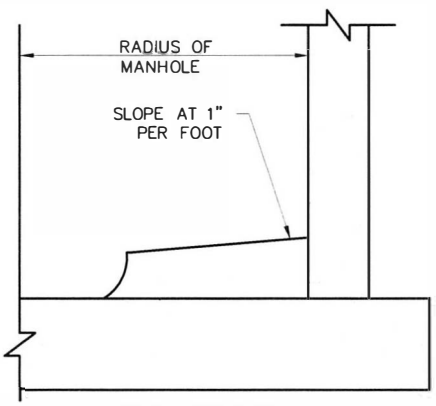

SECTION "A-A"

SCALE: NONE

CONSTRUCTION STANDARDS CITY OF WHITEFISH	SANITARY SEWER WITH DROP INLET	SD-32b

MANHOLE NOTES:

1. ALL MANHOLES NOT MANUFACTURED IN ACCORDANCE WITH ASTM C-478M-93 MUST HAVE BITUMINOUS OR COAL TAR EPOXY COAT ON EXTERIOR.

2. PRECAST REINFORCED CONCRETE MANHOLE RISER AND ECCENTRIC CONE TOP PER ASTM C-478.

3. ECCENTRIC MANHOLES REQUIRED ON ALL 4' DIAMETER MANHOLES GREATER THAN 5'-0" IN OVERALL HEIGHT UNLESS SPECIFIED OTHERWISE.

4. ALL JOINTS BETWEEN MANHOLES SECTIONS, ADJUSTING RINGS, MANHOLE RING & TOP SECTION, AND AROUND SEWER PIPE INTO MANHOLE SHALL BE WATERTIGHT. JOINTING MATERIAL SHALL BE "RAM-NEK" OR EQUAL FOR ALL JOINTS EXCEPT BETWEEN SEWER PIPE AND MANHOLE WALL.

5. FIELD SET COVER TO GRADE WHEN MANHOLE IS LOCATED WITHIN A STREET OR ALLEY, AND INSTALL INFILTRATION PAN OTHERWISE SET COVER 6" ABOVE GRADE.

6. EXTERIOR RUBBERIZED JOINT SEALS, MEETING ASTM C-877. TYPE II WITH A MINIMUM WIDTH OF 9".

7. RUBBERIZED CHIMNEY SEALS ARE REQUIRED ON ALL MANHOLE COVER FRAMES AND ADJUSTING RING COMBINATIONS, MEETING ASTM C923 WITH A MINIMUM THICKNESS OF $\frac{3}{16}$". 1" TO 6" (ONE GRADE RING MAX)/6" TO 12" (TWO GRADE RINGS MAX)

8. SHELVES SHALL SLOPE AT 1" PER FOOT TOWARD CHANNEL.

9. FINISHED MANHOLES SHALL BE IN COMPLIANCE WITH LATEST EDITION OF MPW STANDARD SPECIFICATIONS.

10. FOR MANHOLES NOT LOCATED IN STREETS, PROVIDE A 4'-0"x4'-0"x6" CONCRETE PAD. PROVIDE SLOPE THAT DROPS 0.50 FT FROM MANHOLE LID TO EDGE OF THE SLAB.

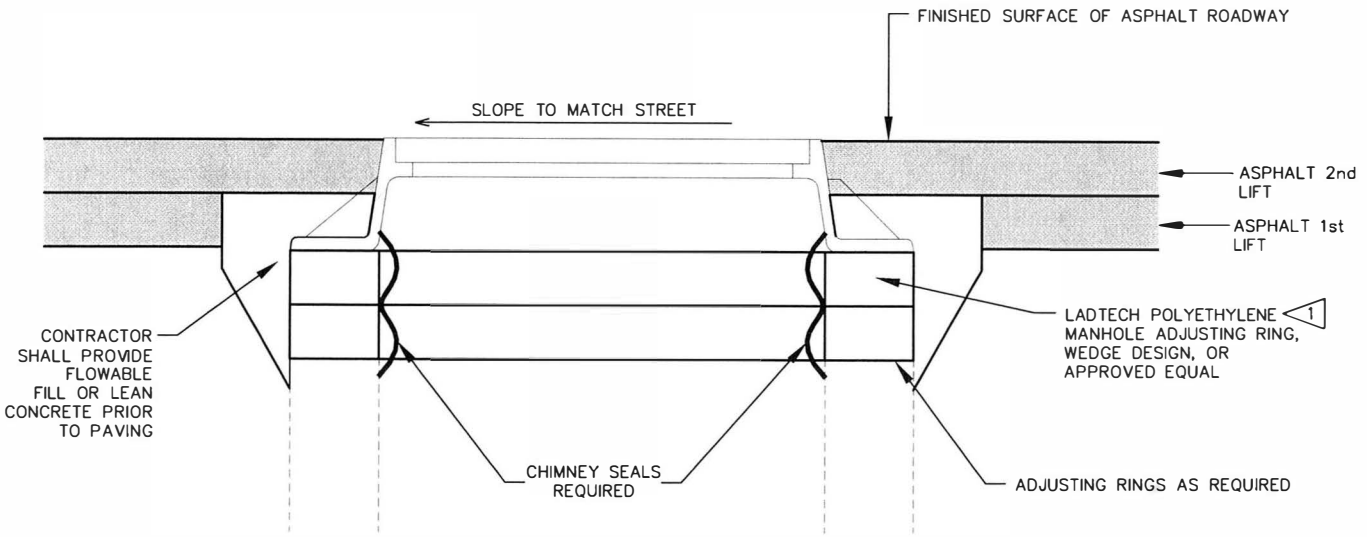

NOTES:

1. ADJUSTMENT RING SIZE/THICKNESS SHALL BE VERIFIED BY CONTRACTOR PRIOR TO ORDERING.
2. ADJUST MANHOLE UPWARD WITH ADJUSTMENT RINGS UNDER FRAME. (MAXIMUM 12" / MAXIMUM 2 RINGS)
3. ADJUST MANHOLE DOWNWARD BY REMOVING A PORTION OF THE MANHOLE RISER AND REBUILDING TO PROPER DIAMETER. SLOPE MANHOLE RING AS REQUIRED TO MATCH LONGITUDINAL AND TRANSVERSE GRADE ON STREET FINAL MANHOLE ADJUSTMENT WILL BE MADE AFTER PAVING.
4. SLOPE MANHOLE FRAME AS REQUIRED TO MATCH SLOPE OF STREET.
5. FINISHED MANHOLE COVER SHALL BE 1/8" TO 1/4" (MAXIMUM) LOWER THAN FINISHED SURFACE.

MANHOLE ADJUSTMENT

SCALE: NONE

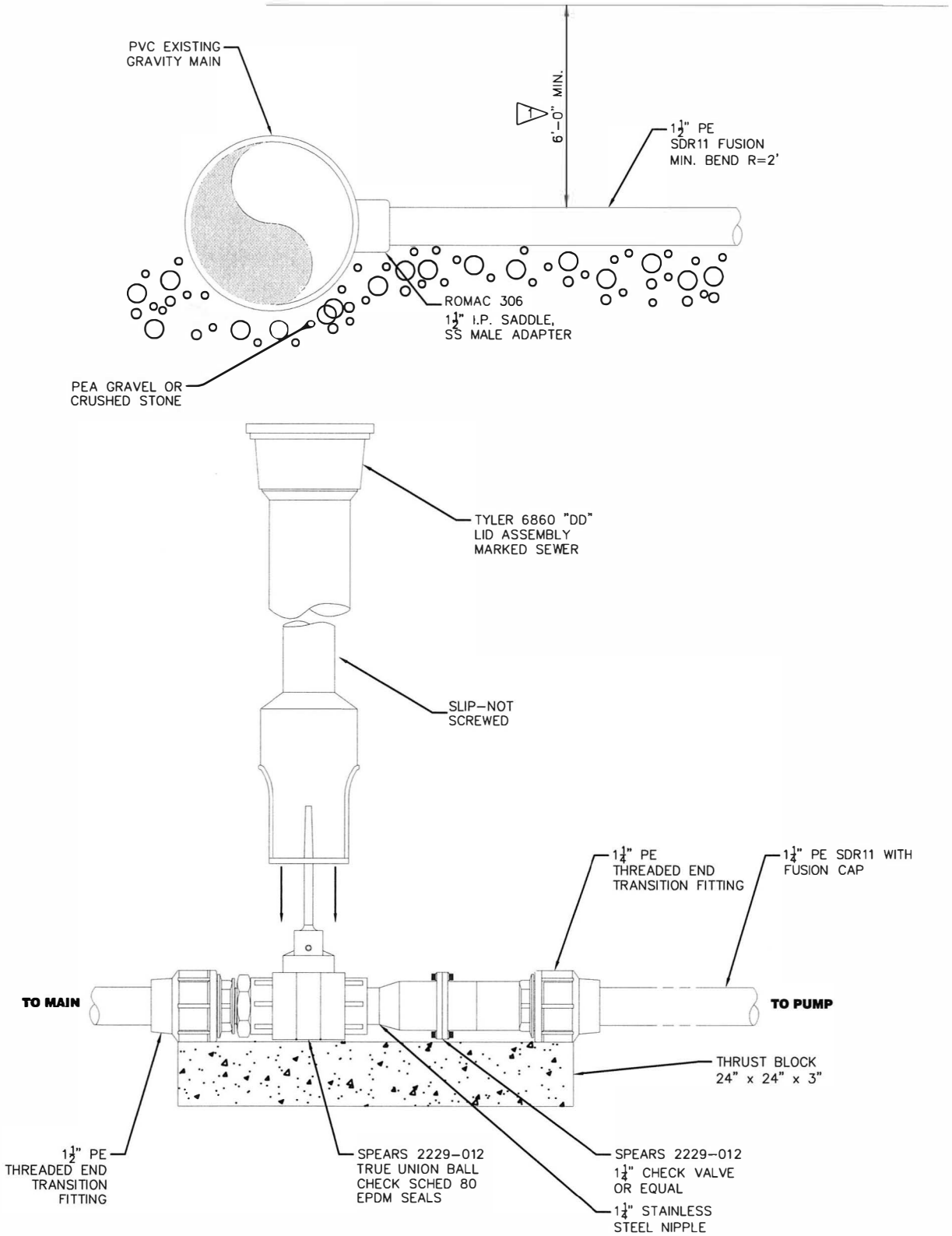

PRESSURIZED SEWER SERVICE ASSEMBLY

SCALE: NONE

DETAIL NOTES:

1. NEED TO INSULATE WHERE PIPE IS LESS THAN 6 FEET DEEP. MUST HAVE APPROVAL OF THE PUBLIC WORKS DIRECTOR IF LESS THAN 6 FEET.

ASSEMBLY TO BE USED WITH 1¼" SDR 11 PIPE ONLY.
PRESSURE RATING: 150 PSI

CONSTRUCTION STANDARDS CITY OF WHITEFISH	PRESSURIZED SEWER SERVICE ASSEMBLY	SD-34

DETAIL NOTES:

1. SEMI-POSITIVE DISPLACEMENT PUMP GRINDER PUMP 1Hp, 240V, 1725 RPM, 1 PHASE
2. HDPE WETWELL, DUAL-WALL
3. $1\frac{1}{4}$" PVC CHECK VALVE & ANTI-SIPHON VALVE
4. $1\frac{1}{4}$" DISCHARGE, FNPT
5. $1\frac{1}{4}$" PVC UNION
6. $1\frac{1}{4}$" PVC BALL VALVE
7. 4" SCH. 40PVC INLET
8. POWER/ALARM CABLE, 14-6
9. ELECTRIC QUICK DISCONNECT
10. ALARM/DISCONNECT PANEL (MOD 250-1)

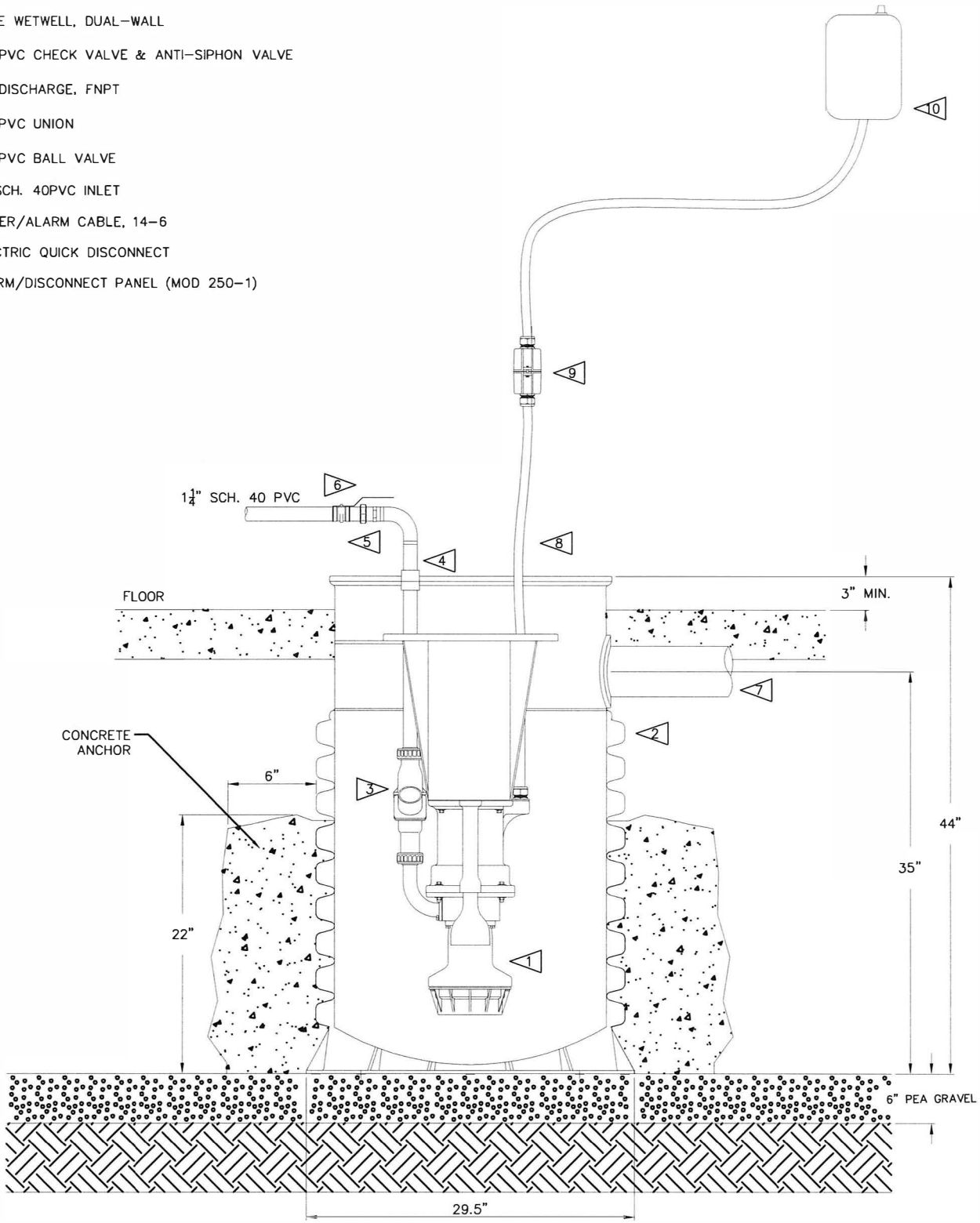

INSIDE GRINDER PUMP

SCALE: NONE

CONSTRUCTION STANDARDS CITY OF WHITEFISH	INSIDE GRINDER PUMP	SD-35

DETAIL NOTES:

1. SEMI-POSITIVE DISPLACEMENT PUMP GRINDER PUMP 1Hp, 240V, 1725 RPM, 1 PHASE
2. HDPE WETWELL, DUAL-WALL
3. $1\frac{1}{4}$" PVC CHECK VALVE & ANTI-SIPHON VALVE
4. $1\frac{1}{4}$" DISCHARGE, FNPT
5. $1\frac{1}{4}$" PVC UNION
6. $1\frac{1}{4}$" PVC BALL VALVE
7. 4" SCH. 40PVC INLET
8. POWER/ALARM CABLE, 14-6
9. ELECTRIC QUICK DISCONNECT
10. ALARM/DISCONNECT PANEL (MOD 250-1)

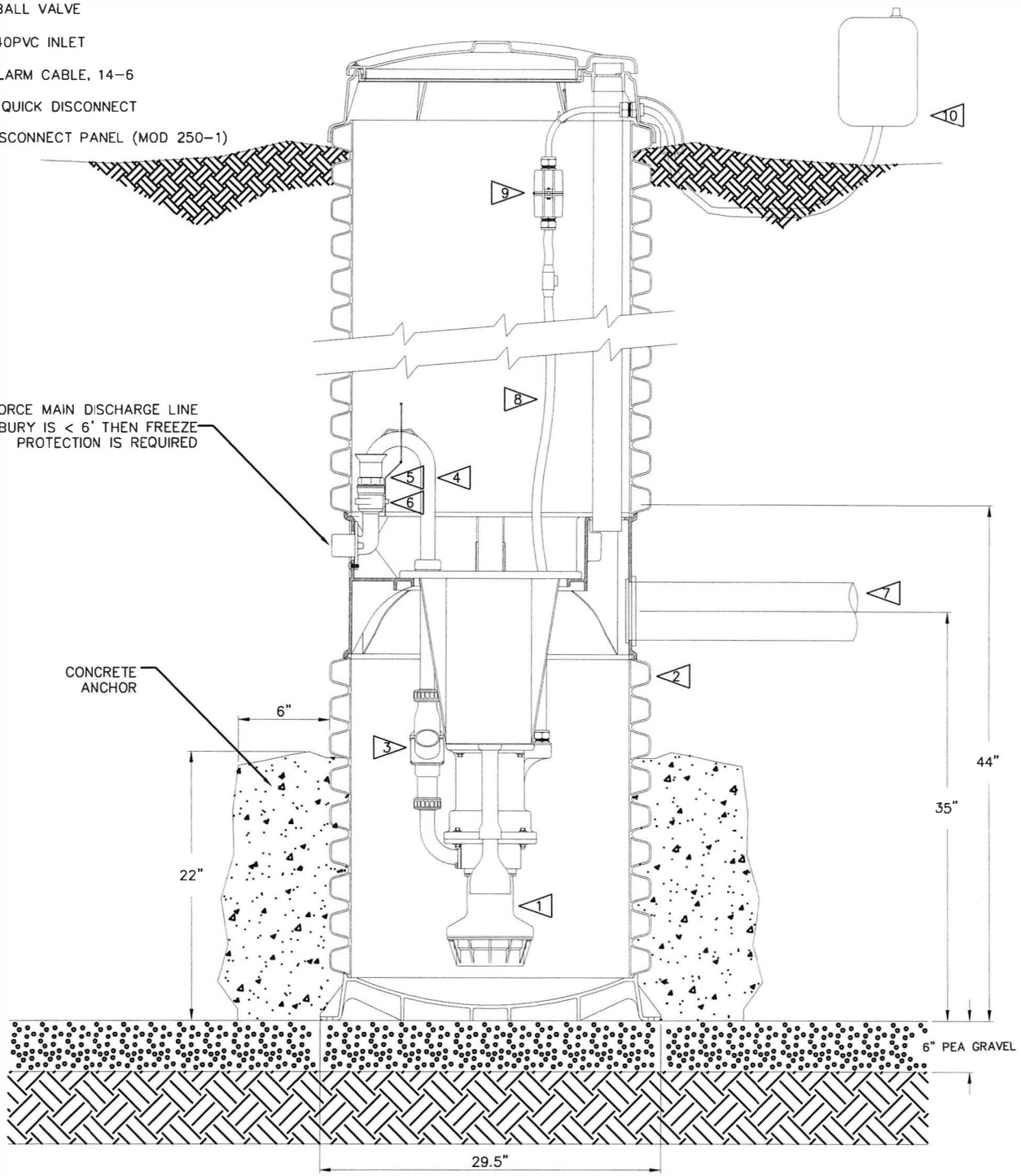

OUTSIDE GRINDER PUMP

SCALE: NONE

CONSTRUCTION STANDARDS CITY OF WHITEFISH	OUTSIDE GRINDER PUMP	SD-36

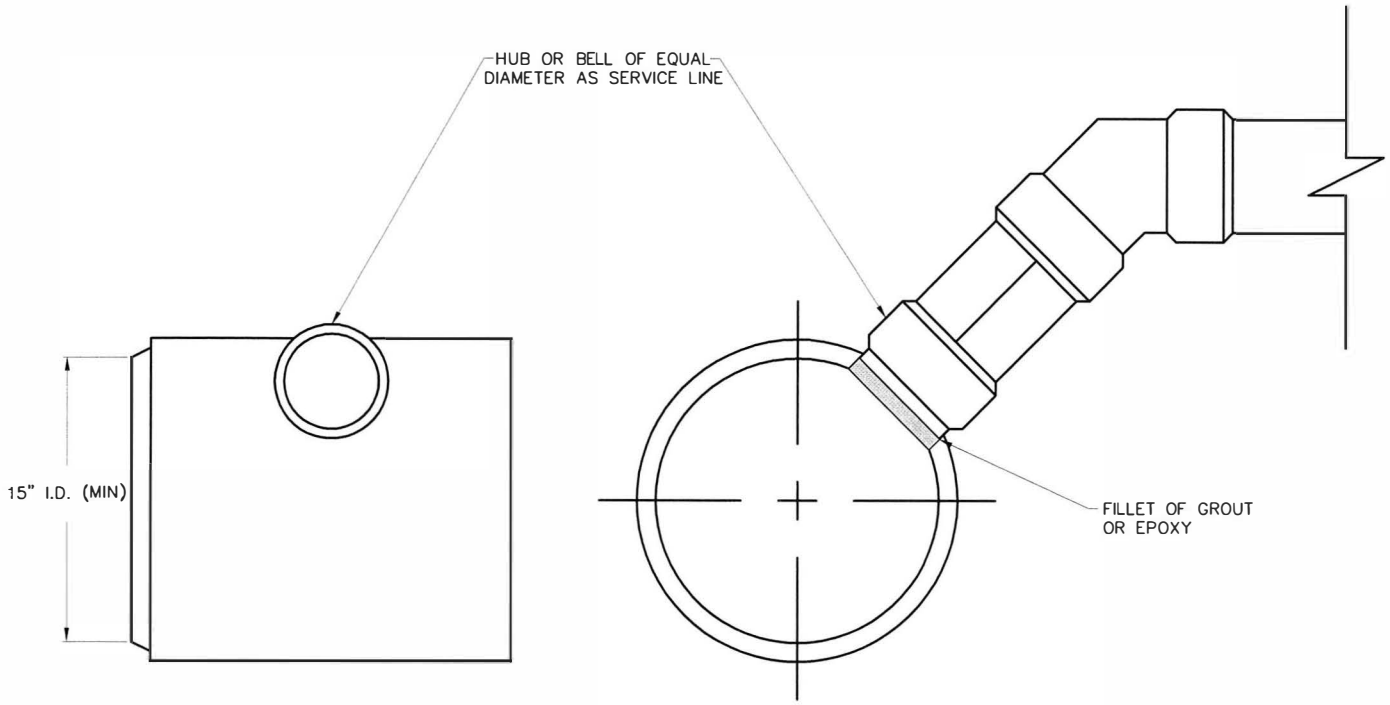

STORM DRAIN SERVICE CONNECTION

SCALE: NONE

NOTES:

1. THIS TYPE OF CONNECTION SHALL BE USED ON MAINS OF 15 INCHES OR LARGER DIAMETER.
2. HUB OR BELL OF EQUAL DIAMETER AND TYPE OF PIPE WHICH WILL BE USED FOR THE SERVICE LINE SHALL BE USED FOR THE CONNECTION FITTING TO THE EXISTING MAIN.
3. HUB OR BELL MUST NOT PROTRUDE MORE THAN $\frac{1}{4}$ INCH INTO EXISTING MAINS.
4. ALL CONNECTIONS TO MAINS SHALL BE WATERTIGHT. A FILLET OF GROUT OR EPOXY SHALL BE APPLIED AROUND THE DIAMETER OF THE HUB OR BELL TO ASSURE A WATERTIGHT OR LEAK PROOF CONNECTION.
5. THIS TYPE OF CONNECTION SHALL BE APPROVED BY THE CITY PRIOR TO INSTALLATION.
6. ALL CONSTRUCTION PHASES OF THIS TYPE OF CONNECTION SHALL BE INSPECTED BY THE CITY OF WHITEFISH'S PUBLIC WORKS DEPARTMENT.
7. LINES UNDER 15" I.D. WILL REQUIRE A SADDLE.

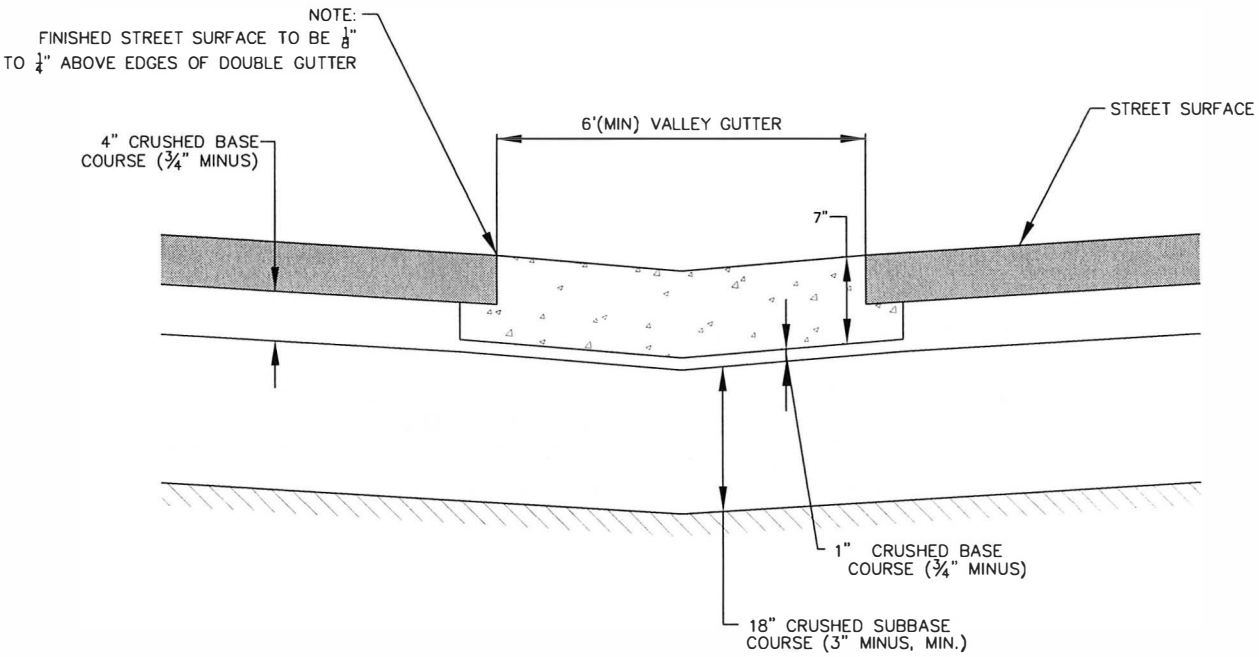

CONCRETE VALLEY GUTTER

SCALE: NONE

NOTES:

1. USE OF VALLEY GUTTERS ARE NOT GENERALLY ALLOWED BY THE PUBLIC WORKS DEPARTMENT.
2. INCLUDING VALLEY GUTTERS IN THE ROAD AND DRAINAGE PLANS REQUIRES PRIOR APPROVAL OF THE CITY ENGINEER.
3. REINFORCEMENT REQUIRED IN VALLEY GUTTERS.

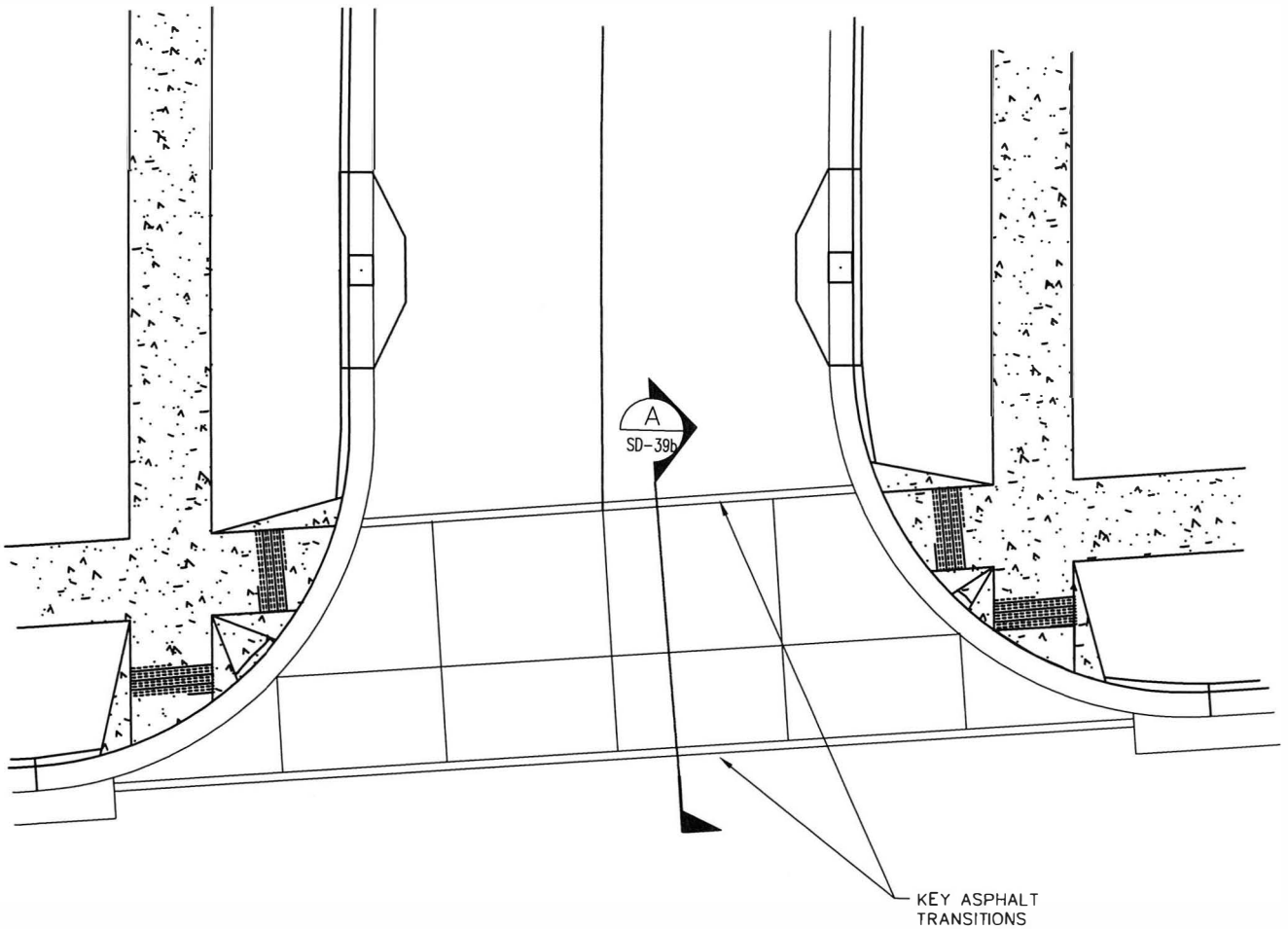

PLAN VIEW CONCRETE VALLEY GUTTER WITH APRON

SCALE: NONE

CONSTRUCTION STANDARDS CITY OF WHITEFISH	PLAN VIEW CONCRETE VALLEY GUTTER WITH APRON	SD-39a

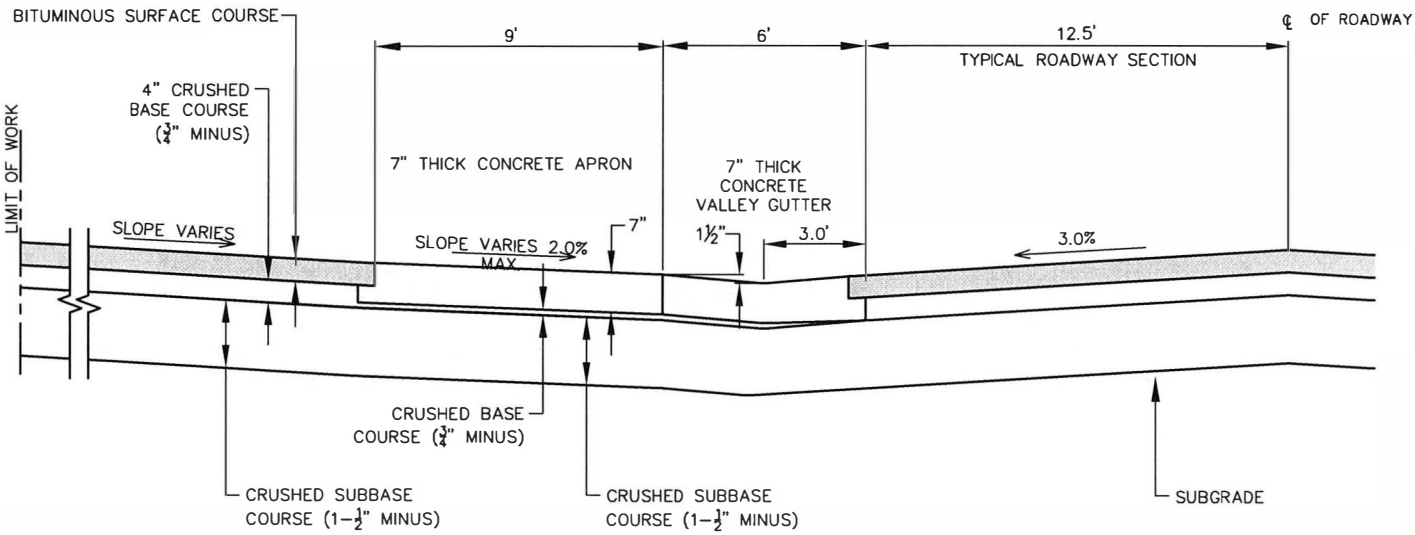

CONCRETE VALLEY GUTTER WITH APRON (A)

SCALE: NONE

SD-19a

CONSTRUCTION STANDARDS CITY OF WHITEFISH	CONCRETE VALLEY GUTTER WITH APRON	SD-39b

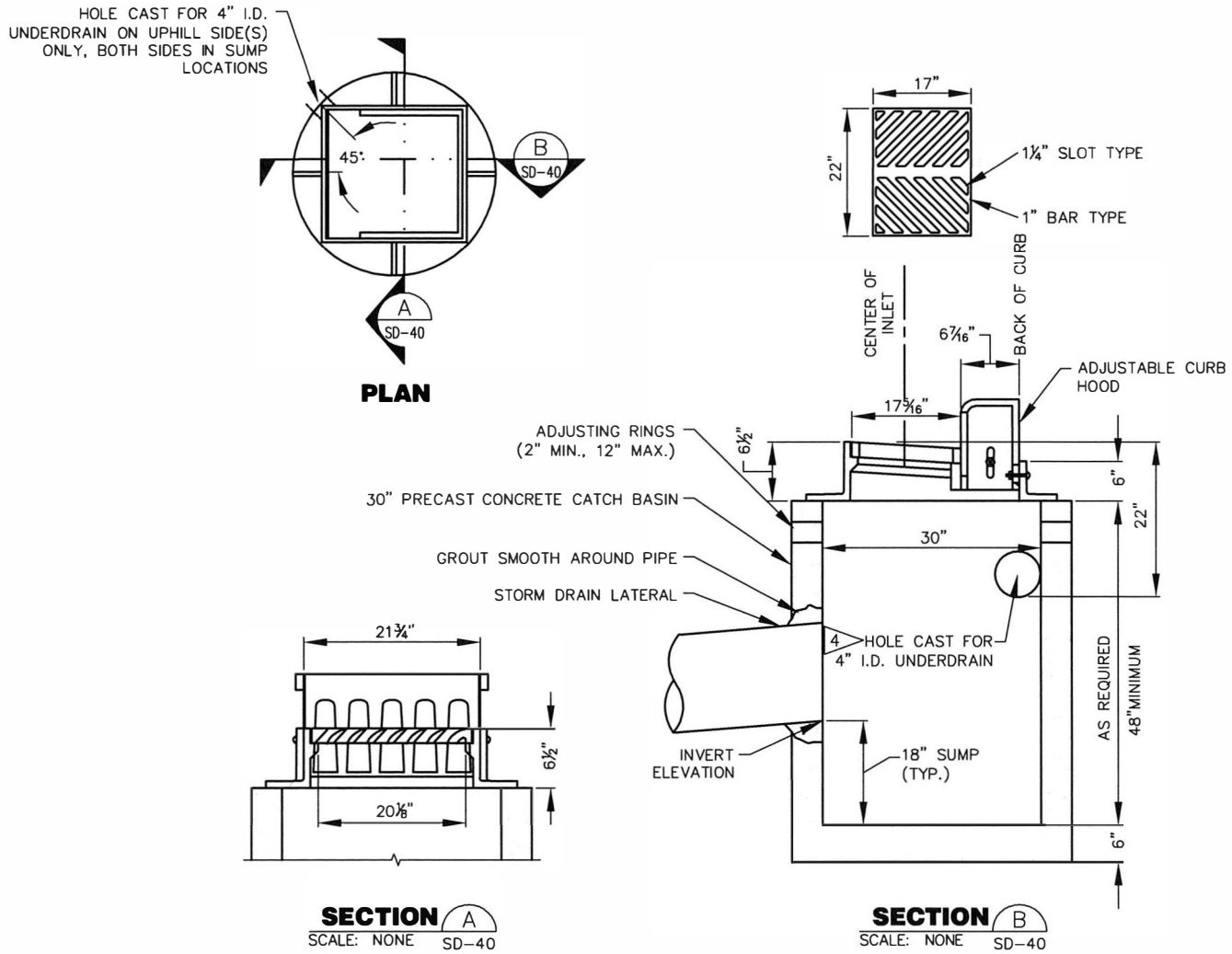

NOTES:

1. ALL CURB INLETS SHALL BE OLYMPIC FOUNDRY MODEL SM49B OR EJIW MODEL 7222M1 OR 7222M3 (HERRINGBONE GRATE).
2. ALL HOLES IN NEW INLETS SHALL BE CAST OR CORED.
3. ALL INLETS SHALL HAVE 'DUMP NO WASTE' FORGED IN GRATE, OR SIMILAR.

4 CONTRACTOR SHALL VERIFY INLETS WHICH REQUIRE UNDERDRAINS.

STORM DRAIN INLET DETAIL

SCALE: NONE

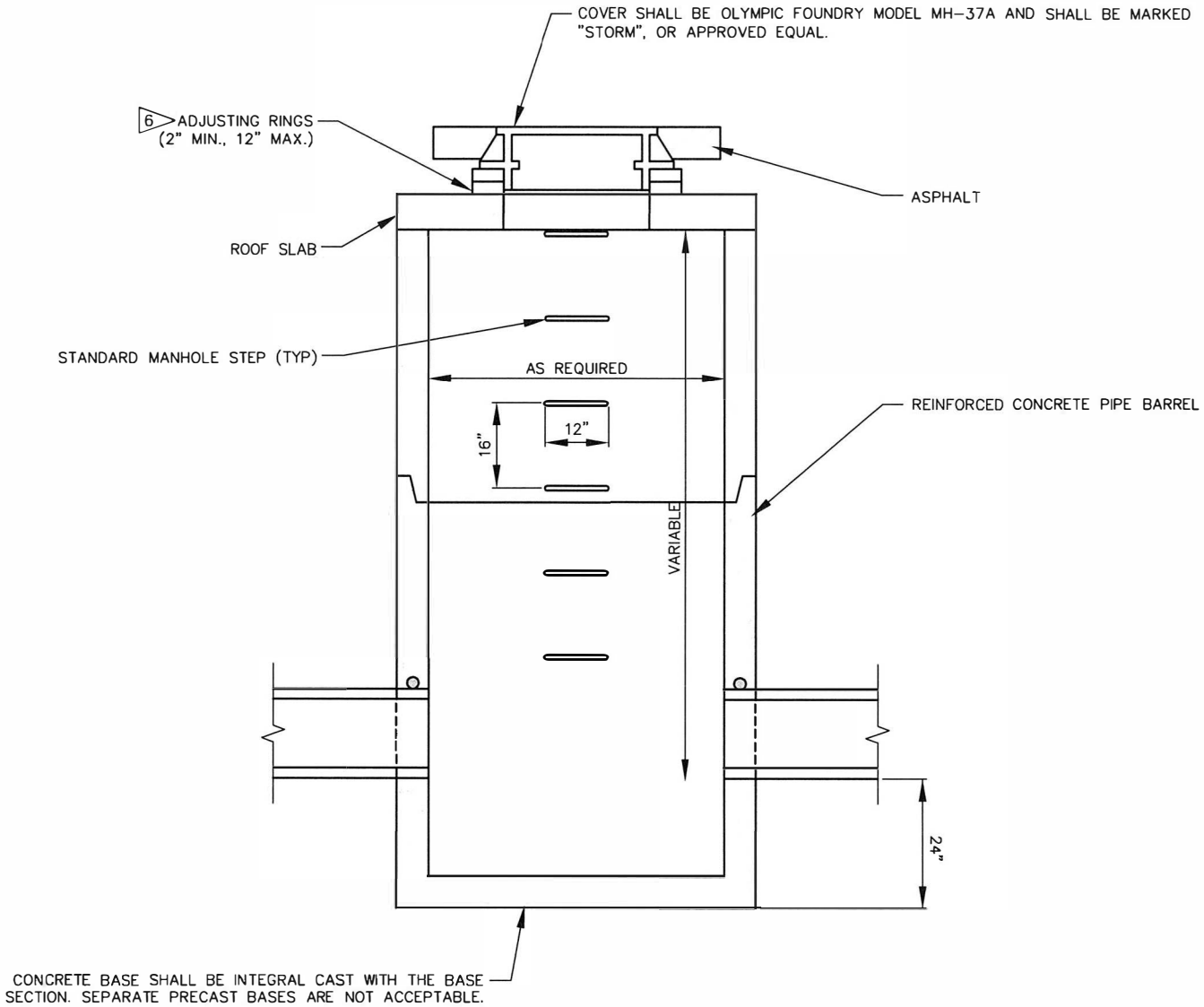

NOTES:

1. ALL JOINTS BETWEEN MANHOLE SECTIONS, ADJUSTING RINGS, AND MANHOLE FRAME SHALL BE WATERTIGHT. JOINT MATERIAL SHALL BE "RAM-NEK" OR EQUAL.
2. PRECAST REINFORCED CONCRETE MANHOLES SHALL CONFORM TO ASTM C-478.
3. ALL HOLES IN NEW MANHOLES SHALL BE CAST OR CORED.
4. ALL STORM MANHOLES SHALL BE STRAIGHT MANHOLES.
5. ADJUST FRAME AND LID TO MATCH CROWN AND GRADE OF STREET.

6 FIELD SET ADJUSTMENT RINGS TO MATCH STREET/FINISHED GROUND. MANHOLES IN STREETS SHALL INCLUDE AT LEAST ONE (1) LADTECH POLYETHYLENE MANHOLE ADJUSTING RING, WEDGE DESIGN, OR APPROVED EQUAL.

STORM DRAIN MANHOLE

SCALE: NONE

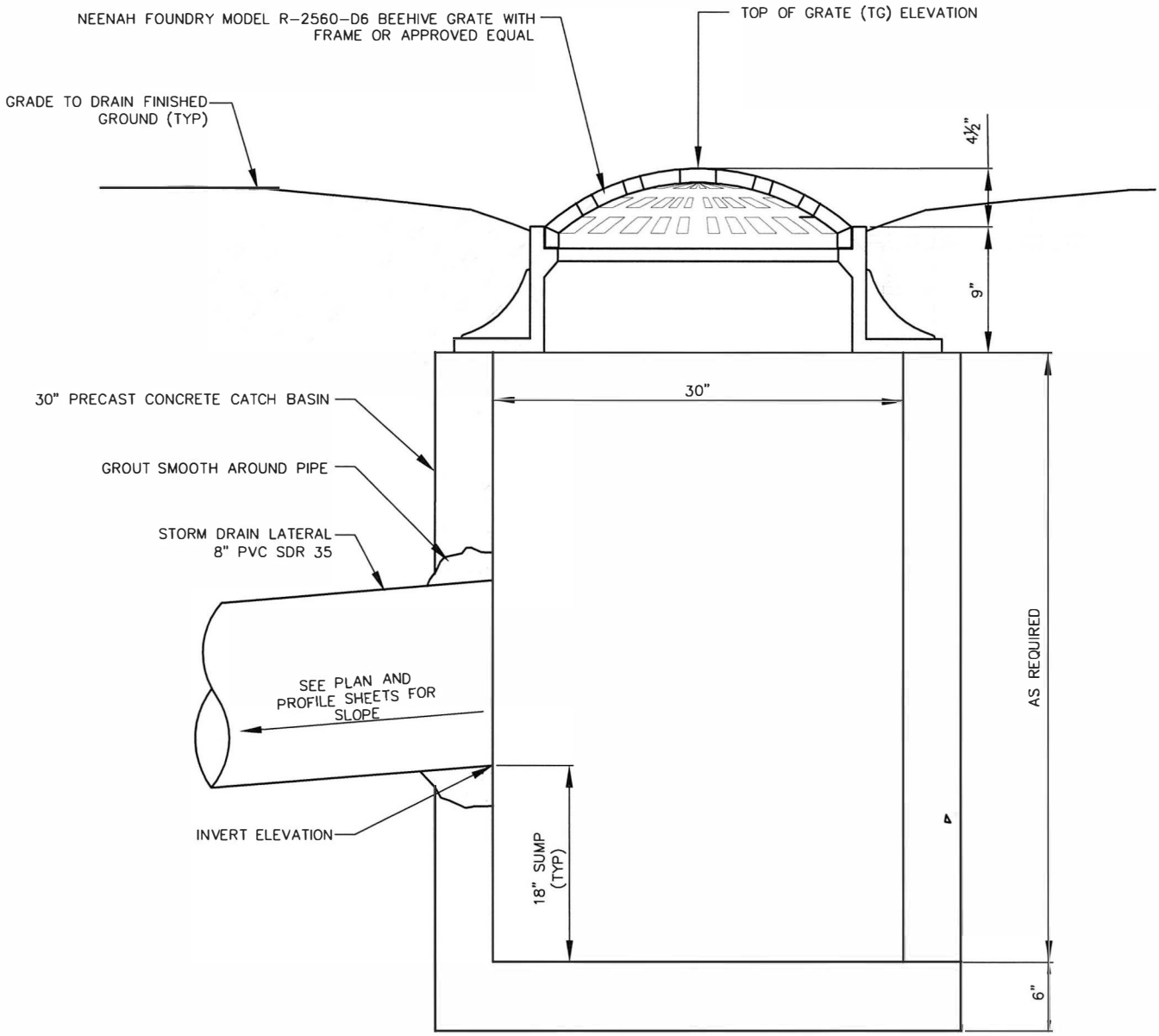

AREA DRAIN AND CATCH BASIN

SCALE: NONE

CONSTRUCTION STANDARDS CITY OF WHITEFISH	AREA DRAIN AND CATCH BASIN	SD-42

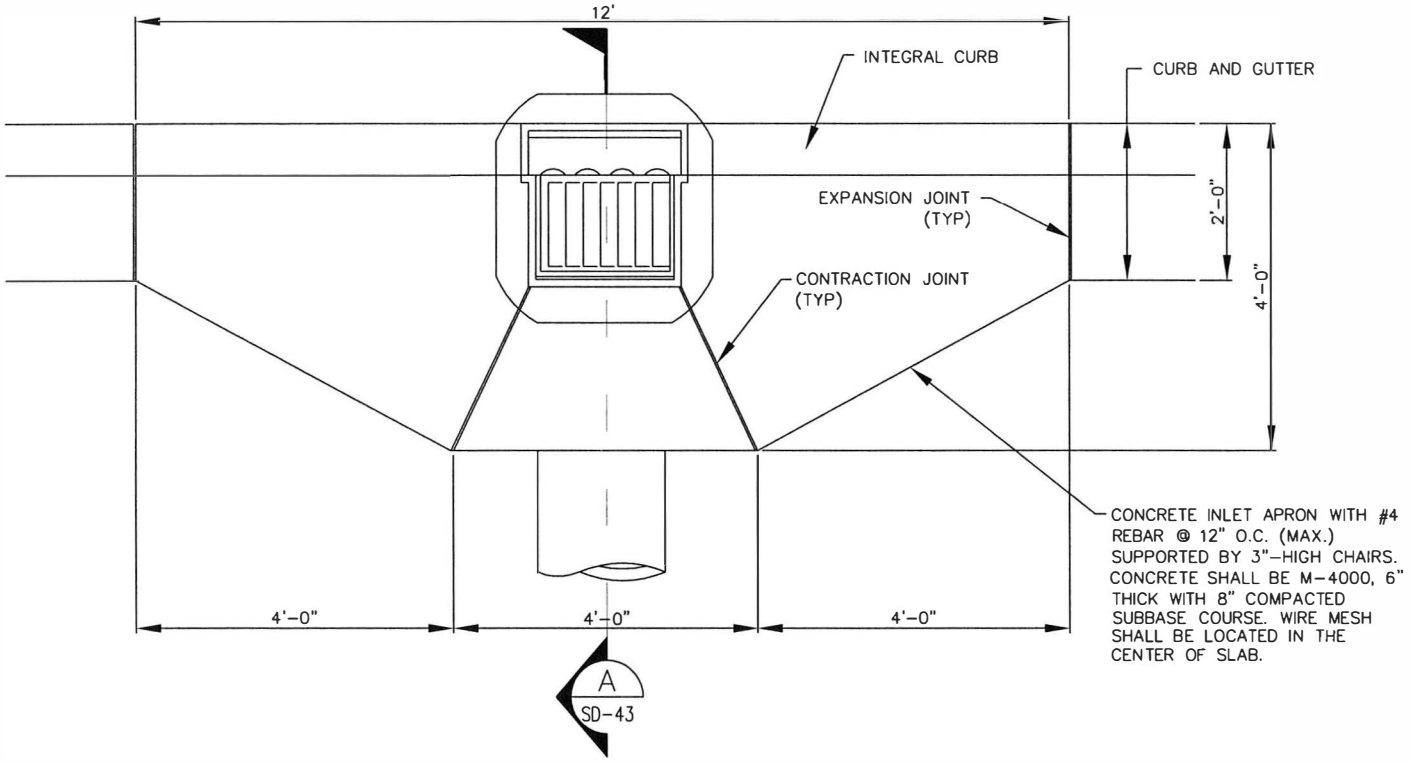

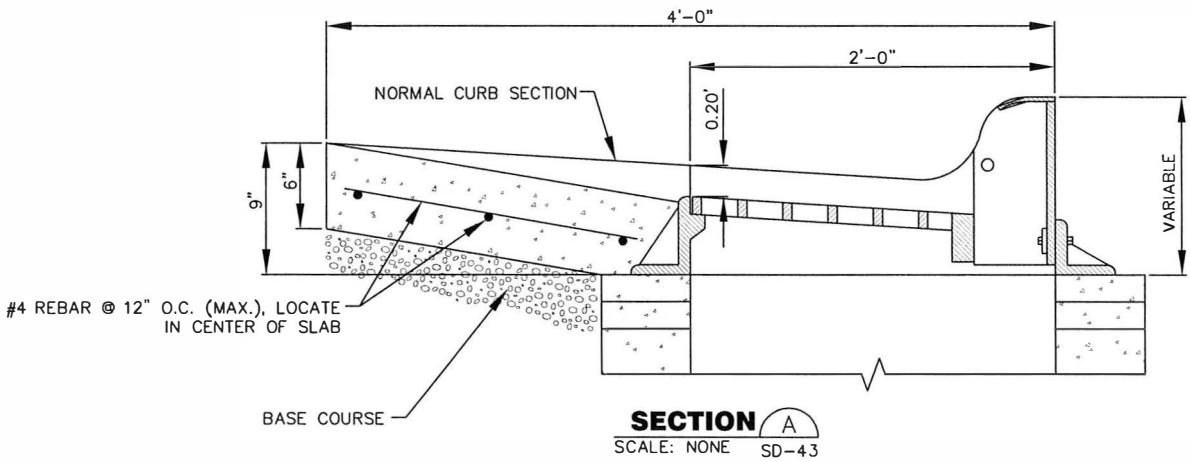

SECTION A SD-43
SCALE: NONE

NOTE:
PROVIDE CONCRETE INLET APRON AT ALL CURB INLETS.

INLET APRON
SCALE: NONE

CONSTRUCTION STANDARDS CITY OF WHITEFISH	INLET APRON	SD-43

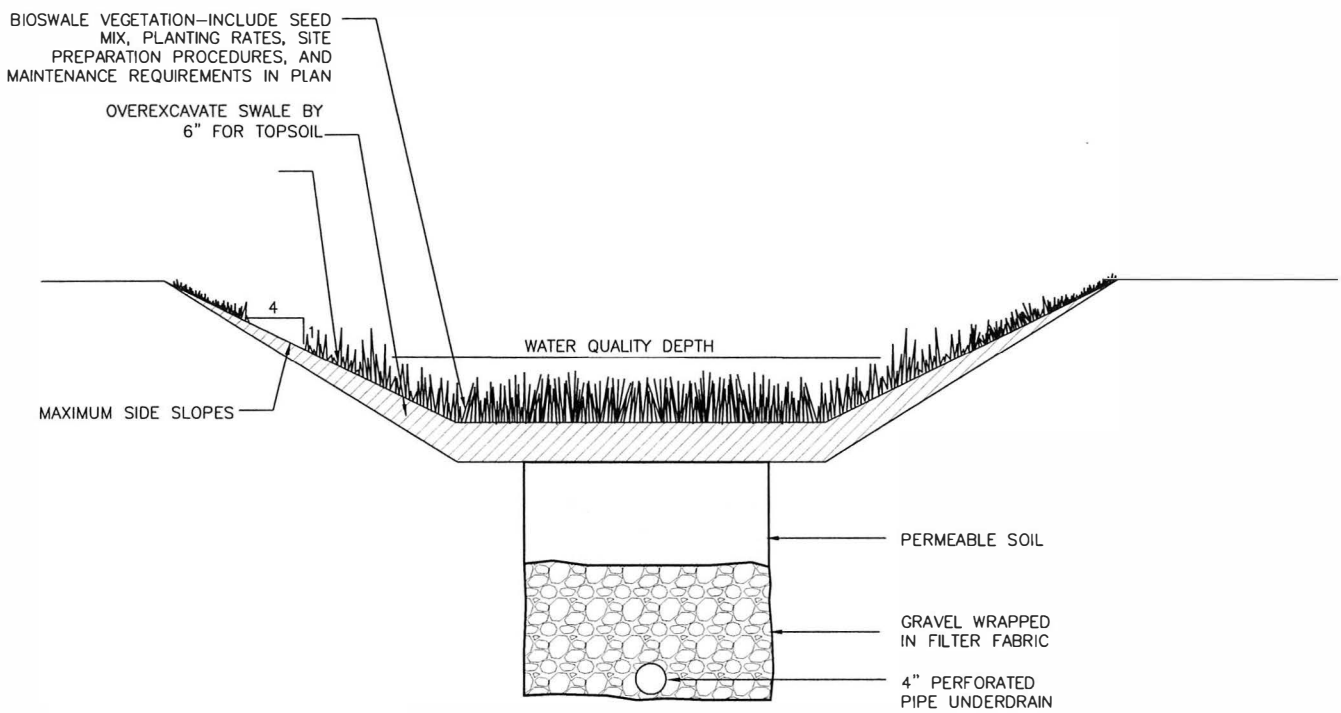

SECTION
SCALE: NONE

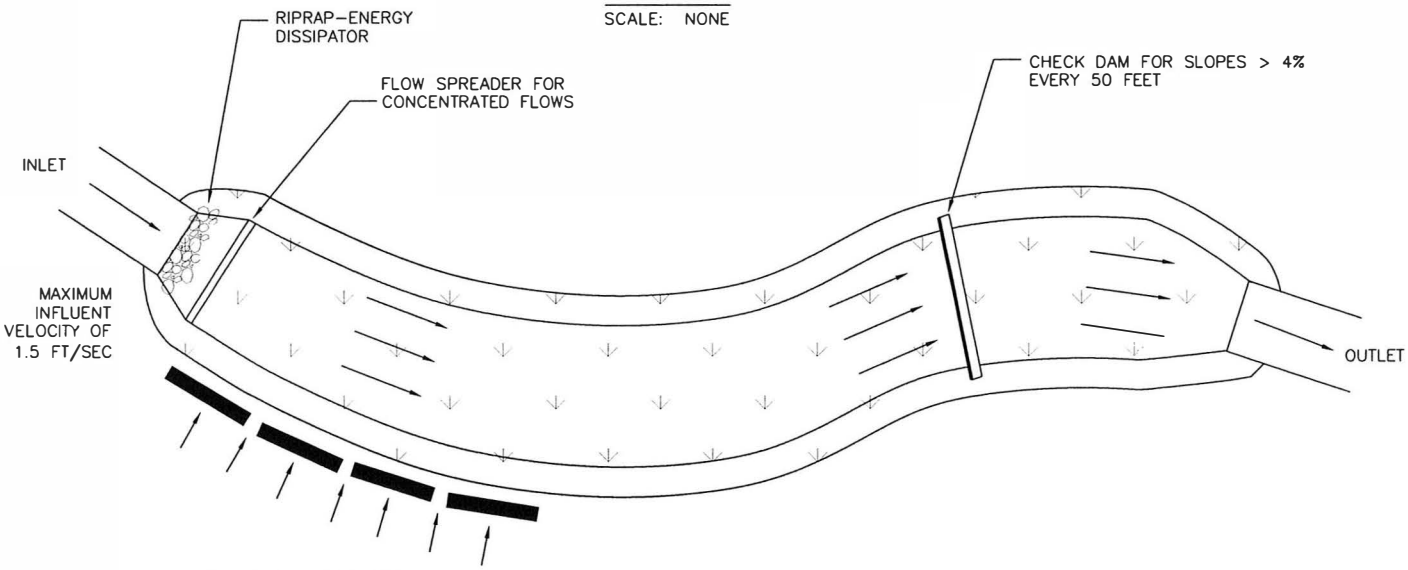

PLAN
SCALE: NONE

1. AN ENERGY DISSIPATOR AND FLOW SPREADER SHOULD BE INSTALLED AT THE ENTRANCE TO THE SWALE TO REDUCE VELOCITY AND EVENLY DISTRIBUTE FLOWS ACROSS THE SWALE.
2. MAXIMUM ALLOWABLE SIDE–SLOPE IS 4:1.
3. GRASS HEIGHT MAINTAINED IN ACCORDANCE WITH DESIGN SPECIFICATIONS. DESIGN GRASS HEIGHT BETWEEN 4 TO 6 INCHES.
4. VELOCITY FOR WATER QUALITY DESIGN STORM MAY NOT EXCEED 2 FEET PER SECOND WITH A GOAL OF 1 FOOT PER SECOND.
5. N VALUE ABOVE WATER QUALITY HEIGHT DETERMINED BASED ON TYPE OF VEGETATION USED. TYPICAL VALUE IS 0.035.
6. IF THE SWALE BOTTOM SLOPE EXCEEDS 4% OR SOILS VERY PERMEABLE, INSTALL CHECK DAMS EVERY 50 FEET TO SLOW THE VELOCITY TO PROHIBIT SCOURING AND PROMOTE INFILTRATION.
7. IF THE SWALE BOTTOM SLOPE IS LESS THAN 1% INSTALL UNDERDRAIN SYSTEM TO PREVENT STANDING WATER.
8. FLOWS IN EXCESS OF WATER QUALITY FLOW SHOULD BE DIVERTED AROUND THE SWALE. IF NECESSARY FOR SWALE TO CONVEY FLOOD WATERS, PROVISIONS SHALL BE MADE TO ENSURE CONVEYANCE IN ACCORDANCE WITH CITY STANDARDS. PROVIDE 1 FOOT FREEBOARD IF NECESSARY FOR FLOOD CONTROL.
9. EROSION CONTROL PRACTICES MUST BE IMPLEMENTED AND MAINTAINED UNTIL VEGETATION IN THE SWALE HAS BECOME ESTABLISHED.
10. THE SWALE BOTTOM SHOULD BE 4–6 FEET WIDE (2 FEET MINIMUM).
11. MAINTENANCE OF SWALE WILL BE THE RESPOSIBILITY OF THE PROPERTY OWNER OR HOMEOWNER'S ASSOCIATION. THE PUBLIC WORKS DEPARTMENT WILL NOT ASSUME MAINTENANCE RESPONSIBILITIES FOR BIOSWALES.

CONSTRUCTION STANDARDS CITY OF WHITEFISH	BIOSWALE DETAIL	SD–44

DETAIL NOTE:

PVC PIPE ADAPTERS AND GASKET MAY VARY IN SHAPE AND SIZE AS ILLUSTRATED IN DETAIL BY ACCEPTABLE ALTERNATE IN ACCORDANCE WITH ASTM C428.

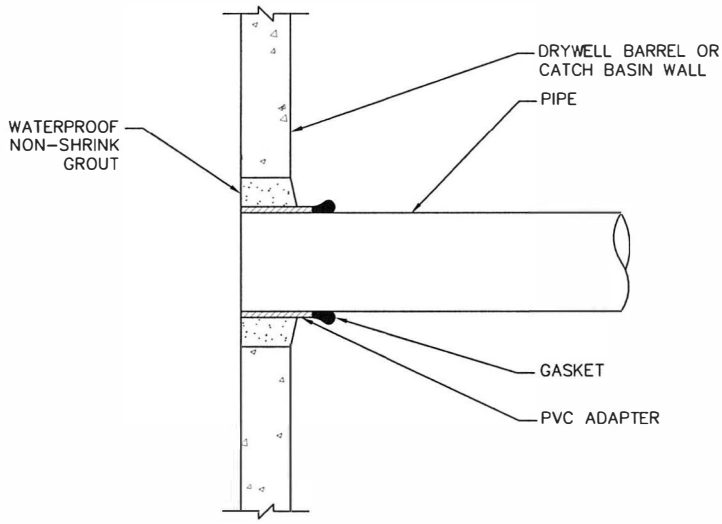

PVC ADAPTER (SAND COLLAR)

SCALE: NONE

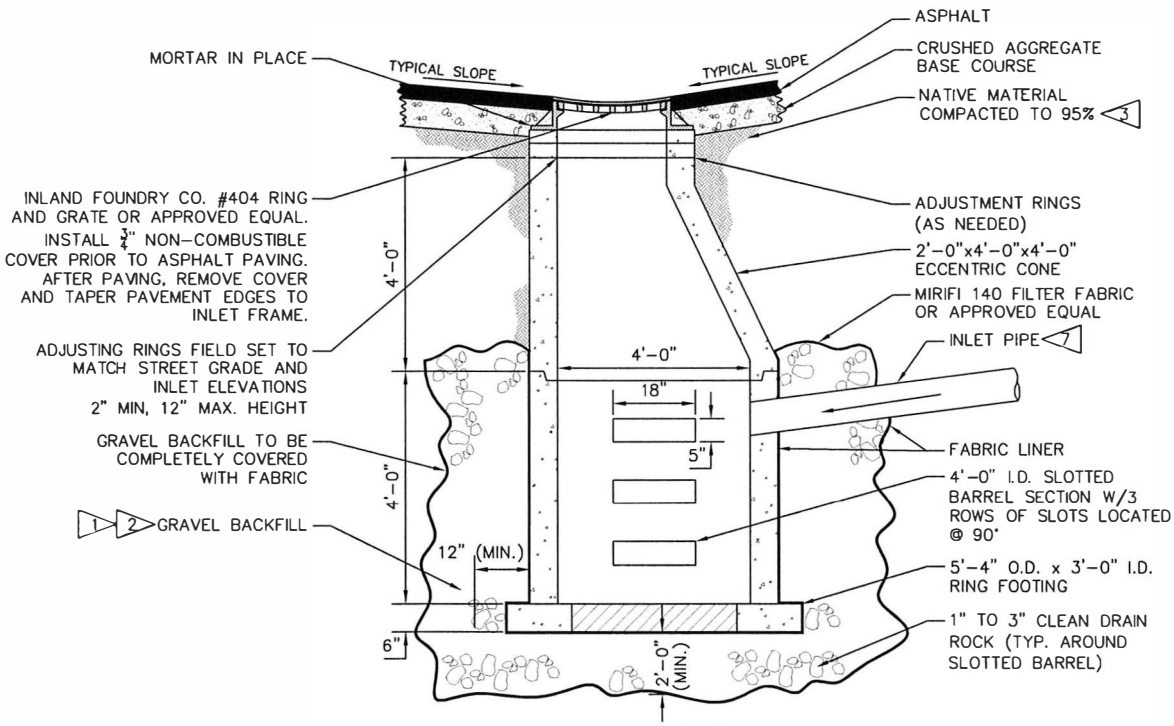

DRYWELL - TYPE 'A'

SCALE: NONE

CONSTRUCTION STANDARDS CITY OF WHITEFISH	DRYWELL DETAIL TYPE 'A'	SD-45a

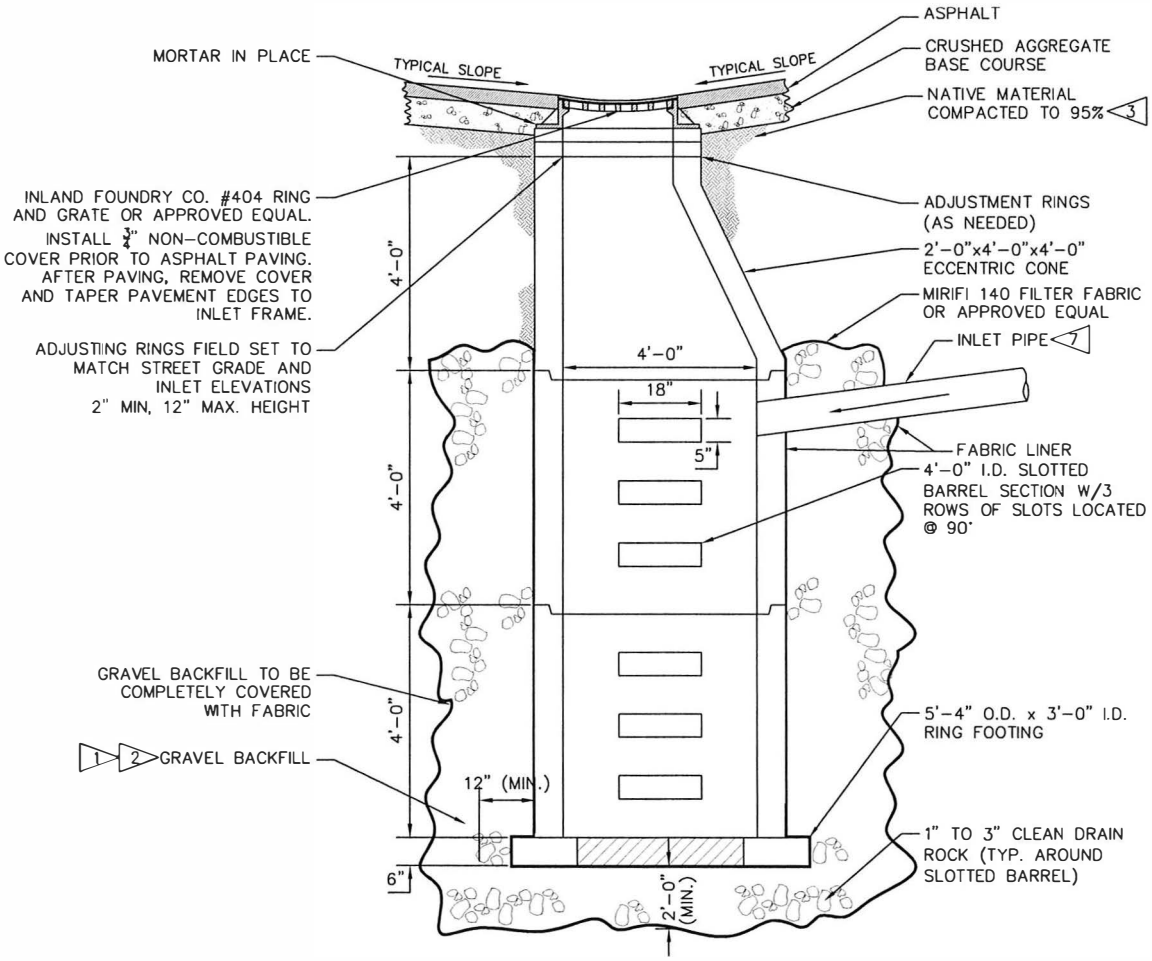

DRYWELL - TYPE 'B'

SCALE: NONE

CONSTRUCTION STANDARDS CITY OF WHITEFISH	DRYWELL DETAIL TYPE 'B'	SD-45b

DRYWELL NOTES:

1. GRAVEL BACKFILL QUANTITY FOR DRYWELLS:
   TYPE "A" – 30 CUBIC YARDS MINIMUM / 42 TONS.
   TYPE "B" – 40 CUBIC YARDS MINIMUM / 56 TONS.

2. SPECIAL BACKFILL MATERIAL FOR DRYWELLS SHALL CONSIST OF WASHED GRAVEL GRADED FROM 1" TO 3" WITH A MAXIMUM OF 5% PASSING THE U.S. No. 200 SCREEN, AS MEASURED BY WEIGHT. A MAXIMUM OF 10% OF THE AGGREGATE, AS MEASURED BY WEIGHT, MAY BE CRUSHED OR FRACTURED ROCK. THE REMAINING 90% SHALL BE NATURALLY OCCURRING UNFRACTURED MATERIAL.

3. NATIVE BACKFILL: WITH PRIOR APPROVAL OF THE CITY AND THE ENGINEER, ON-SITE EXCAVATED SOIL MAY BE USED TO BACKFILL WATER MAINS, WATER SERVICES, FIRE HYDRANT LEADS, SEWER MAINS AND SEWER SERVICES. BLOCKY OR PLATY CLAY, AND SATURATED OR NEAR SATURATED SOILS, WILL NOT BE PERMITTED FOR USE AS BACKFILL MATERIAL. BACKFILL MATERIAL SHALL BE PLACED IN 12" MAXIMUM DRY DENSITY, AS DETERMINED BY AASHTO T-99 OR ASTM D698. THE CONTRACTOR SHALL PROVIDE THE ENGINEER WITH A PROCTOR (MOISTURE-DENSITY RELATIONSHIP) FOR THE BACKFILL MATERIAL.

4. ADJUSTMENT BLOCKS SHALL BE CEMENT CONCRETE.

5. PRECAST RISER MAY BE USED IN COMBINATION WITH OR IN LIEU OF ADJUSTING BLOCKS.

6. WHEN PVC PIPE IS USED A PVC ADAPTER SHALL BE INSTALLED.

7. PIPES SHALL BE GROUTED INTO DRYWELLS.

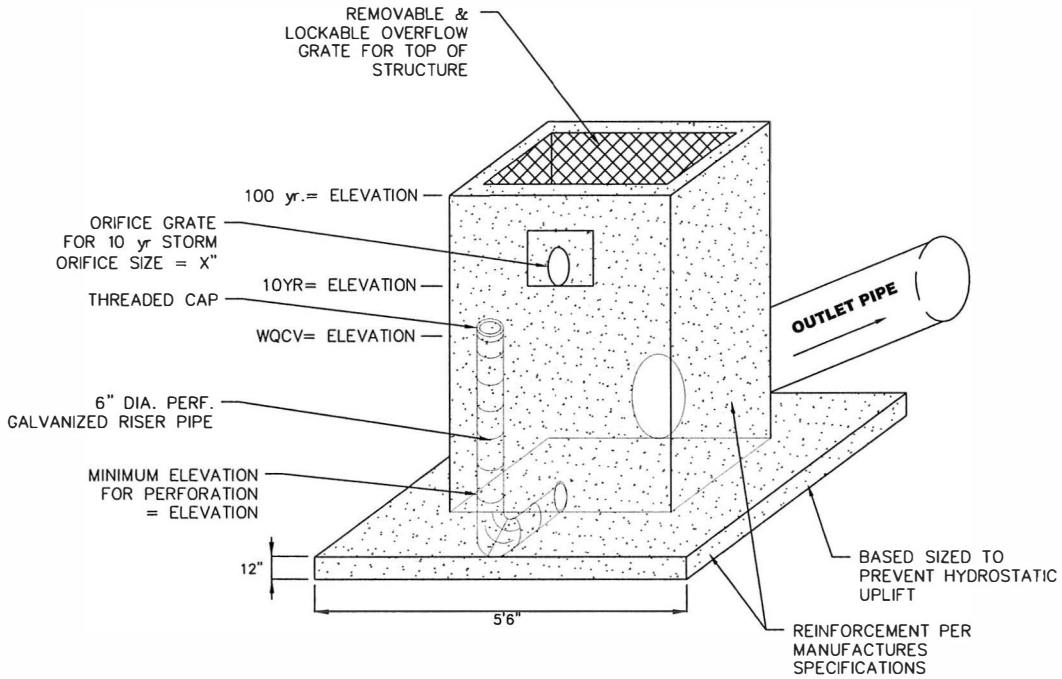

OUTLET STRUCTURE

SCALE: NONE

CONSTRUCTION STANDARDS CITY OF WHITEFISH	OUTLET STRUCTURE	SD-46a

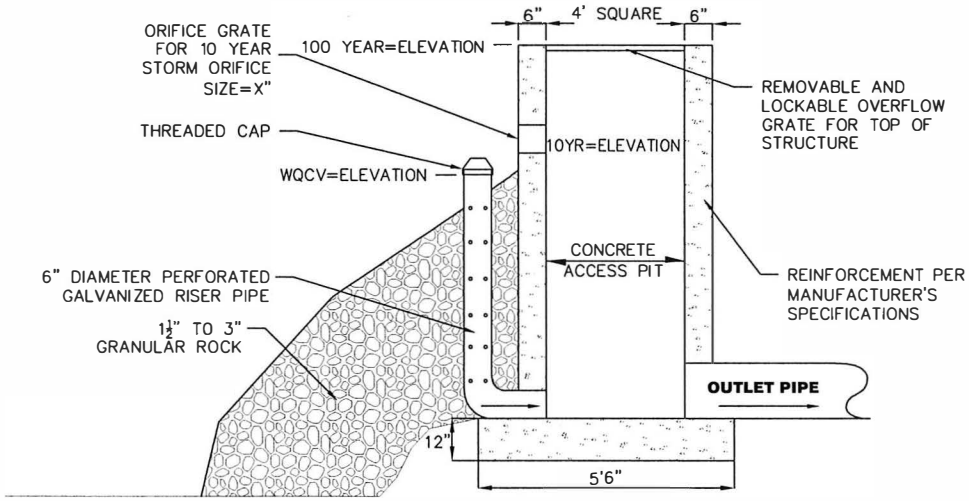

OUTLET STRUCTURE

SCALE: NONE

CONSTRUCTION STANDARDS CITY OF WHITEFISH	OUTLET STRUCTURE	SD-46b

Ordering Guide:
HADCO BRAND Special Model Number
(Specific to City of Whitefish)
LUMINAIRE #C2316-50-HPS-J-240V
POLE #CP2316-14-J
240V-50W, HPS, MEDIUM BASE
COLOR-GREEN

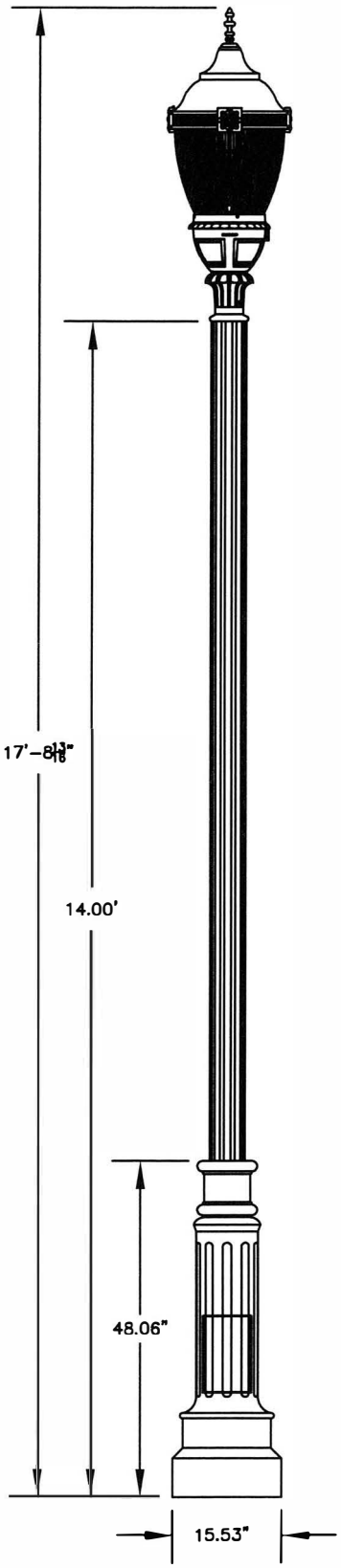

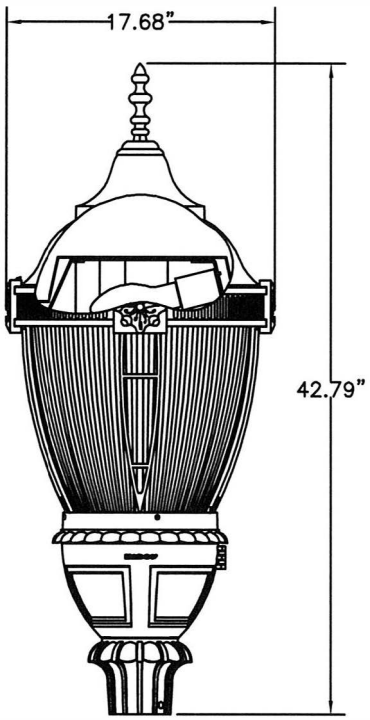

LUMINAIRE DETAIL

CONSTRUCTION STANDARDS CITY OF WHITEFISH	LUMINAIRE AND POLE DETAIL	SD-47a

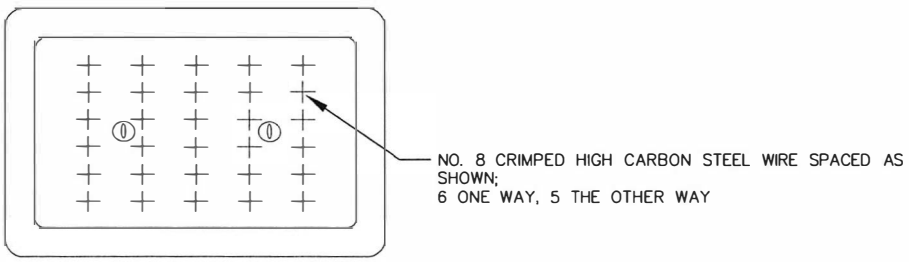

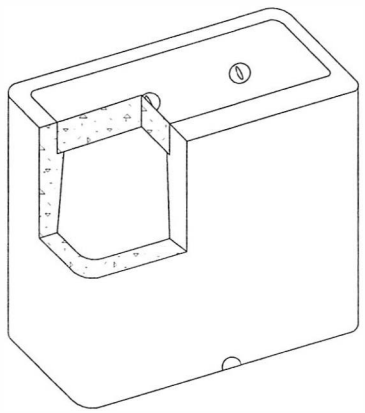

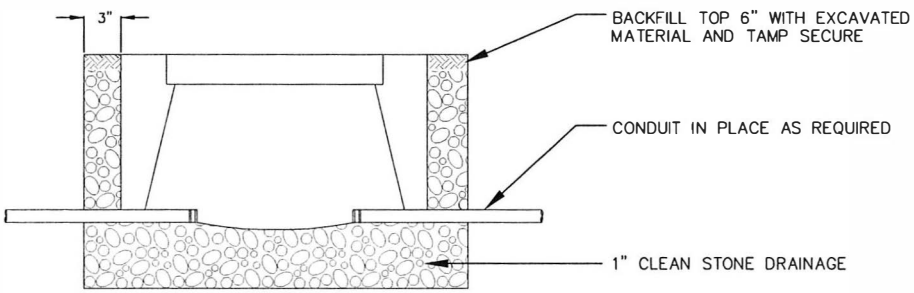

TYPE 1 PULL BOX

SCALE: NONE

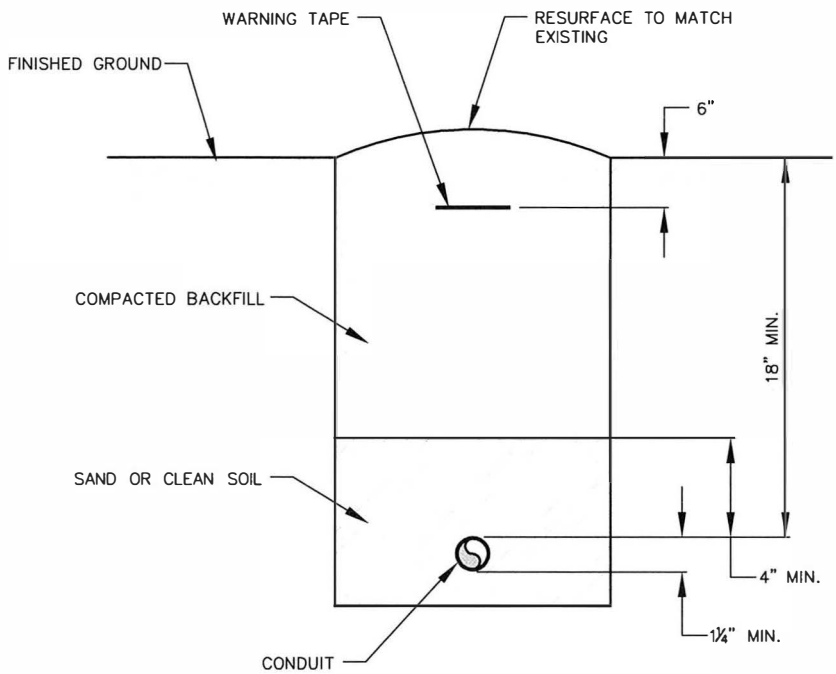

NOTES:

1. COORDINATE TRENCHING TO SHARE TRENCHES WITH OTHER UTILITIES WHEN FEASIBLE

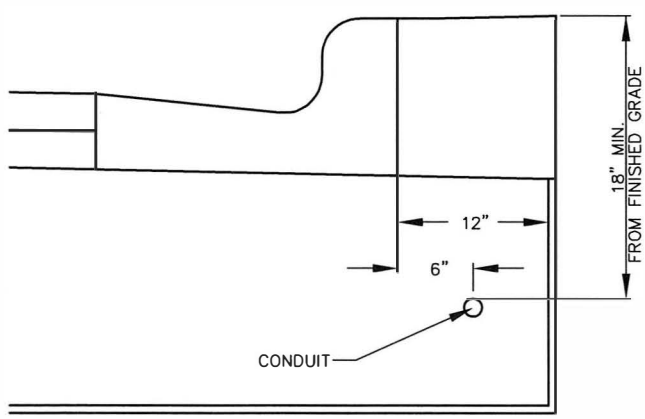

TYPICAL STREET LIGHTING CONDUIT

SCALE: NONE

CONSTRUCTION STANDARDS CITY OF WHITEFISH	TYPICAL STREET LIGHTING CONDUIT	SD-47c

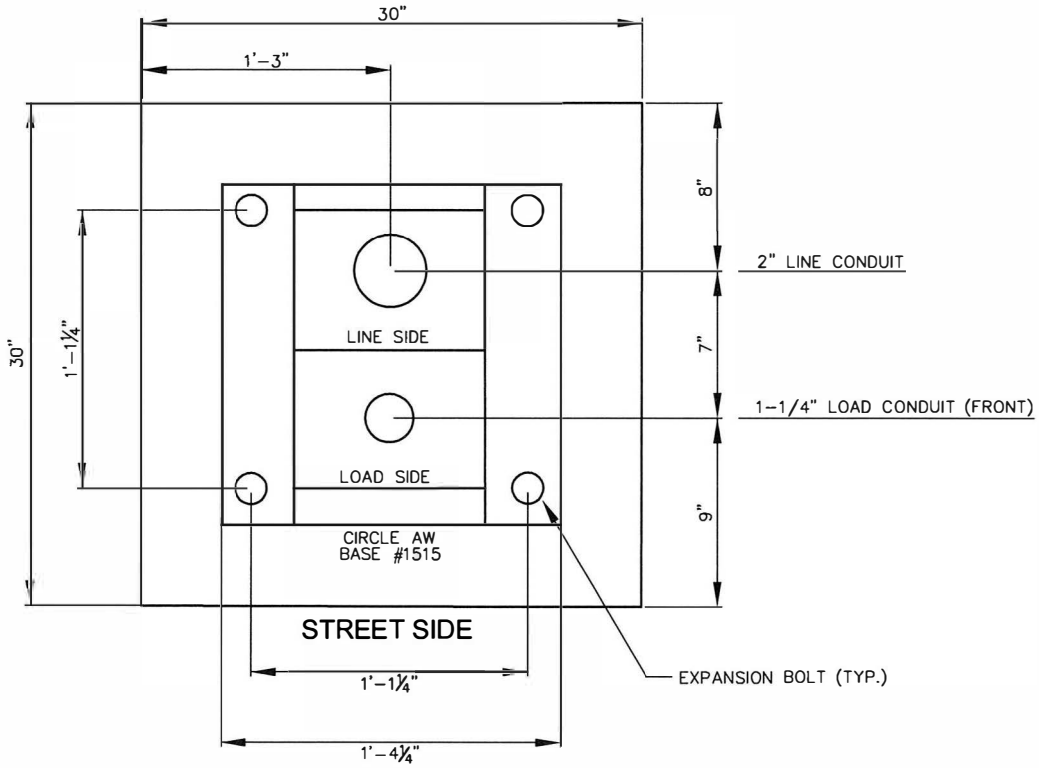

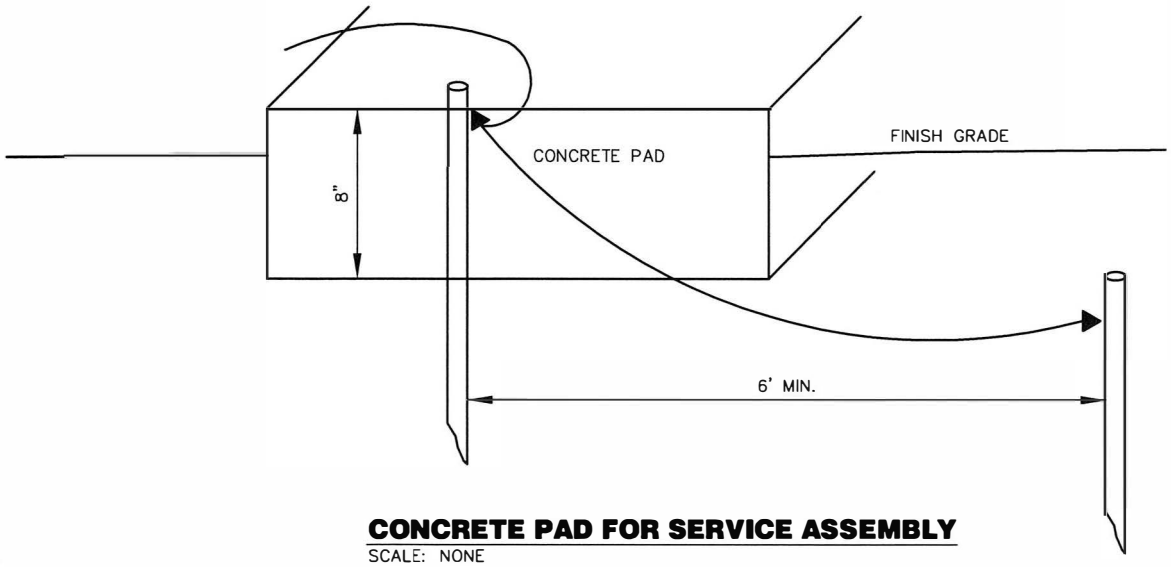

CONCRETE PAD FOR SERVICE ASSEMBLY

SCALE: NONE

NOTES:

1. 2-8' COPPER CLAD GROUND RODS. INSTALL 6' APART. #6 AWG GROUND WIRE WITH 6' FREE CONDUCTOR FOR CONNECTION TO SERVICE.
2. CONCRETE PAD TO BE 8" DEEP-PLACE ⅝" EXPANSION BOLTS.
3. MOUNTING BOLTS TO BE FIELD INSTALLED.

CONSTRUCTION STANDARDS CITY OF WHITEFISH	CONCRETE PAD FOR SERVICE ASSEMBLY	SD-47d

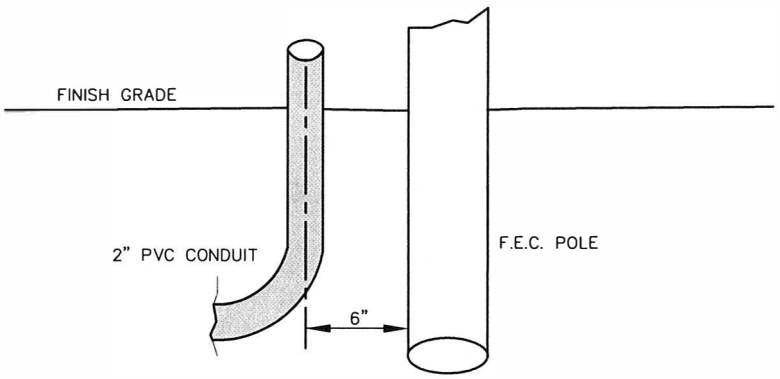

NOTES:

1. 2" PVC RISER AT F.E.C. POLE STUB UP SEPARATION 6" TO CENTERLINE.

PVC RISER

SCALE: NONE

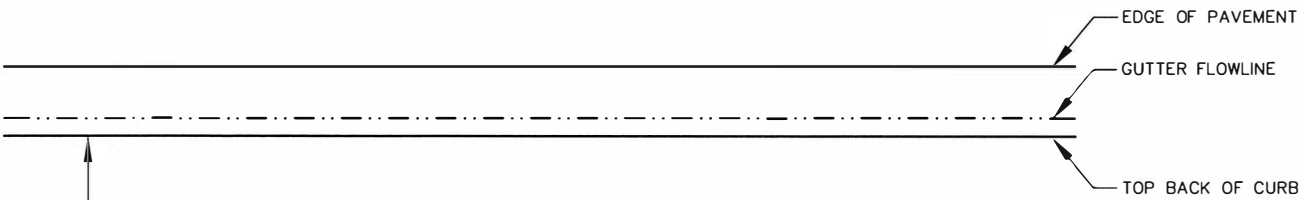

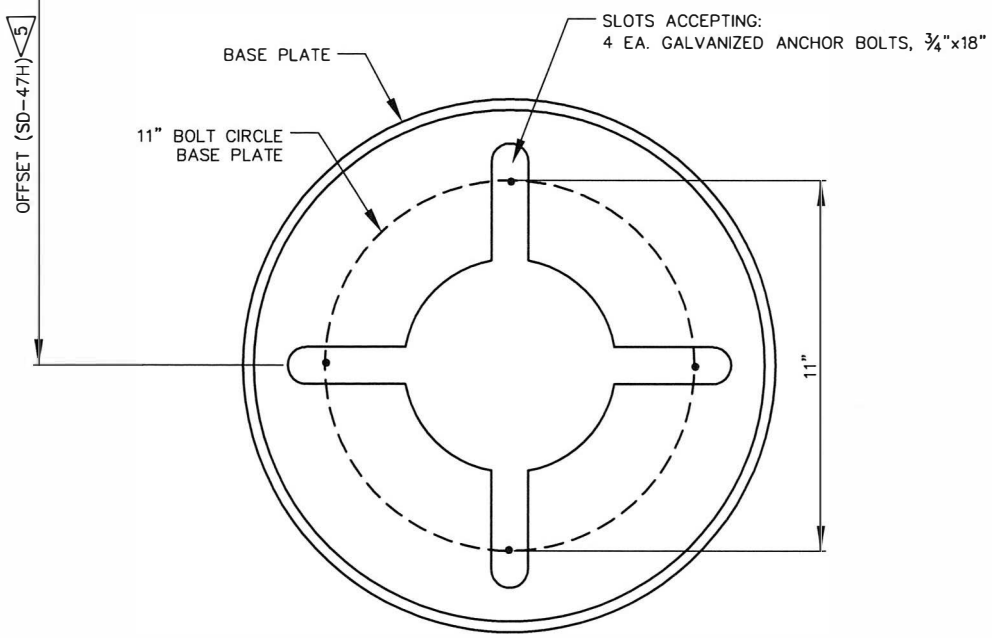

CONCRETE STANDARD (BASE):18"

NOTE:

WHEN ORDERING LIGHTS HAVE BOLTS AND BASE TEMPLATE SENT SEPARATELY PRIOR TO INSTALLATION OF CONCRETE LIGHTING BASE.

BASE PLATE

SCALE: NONE

CONSTRUCTION STANDARDS CITY OF WHITEFISH	BASE PLATE AND PVC RISER DETAILS	SD-47e

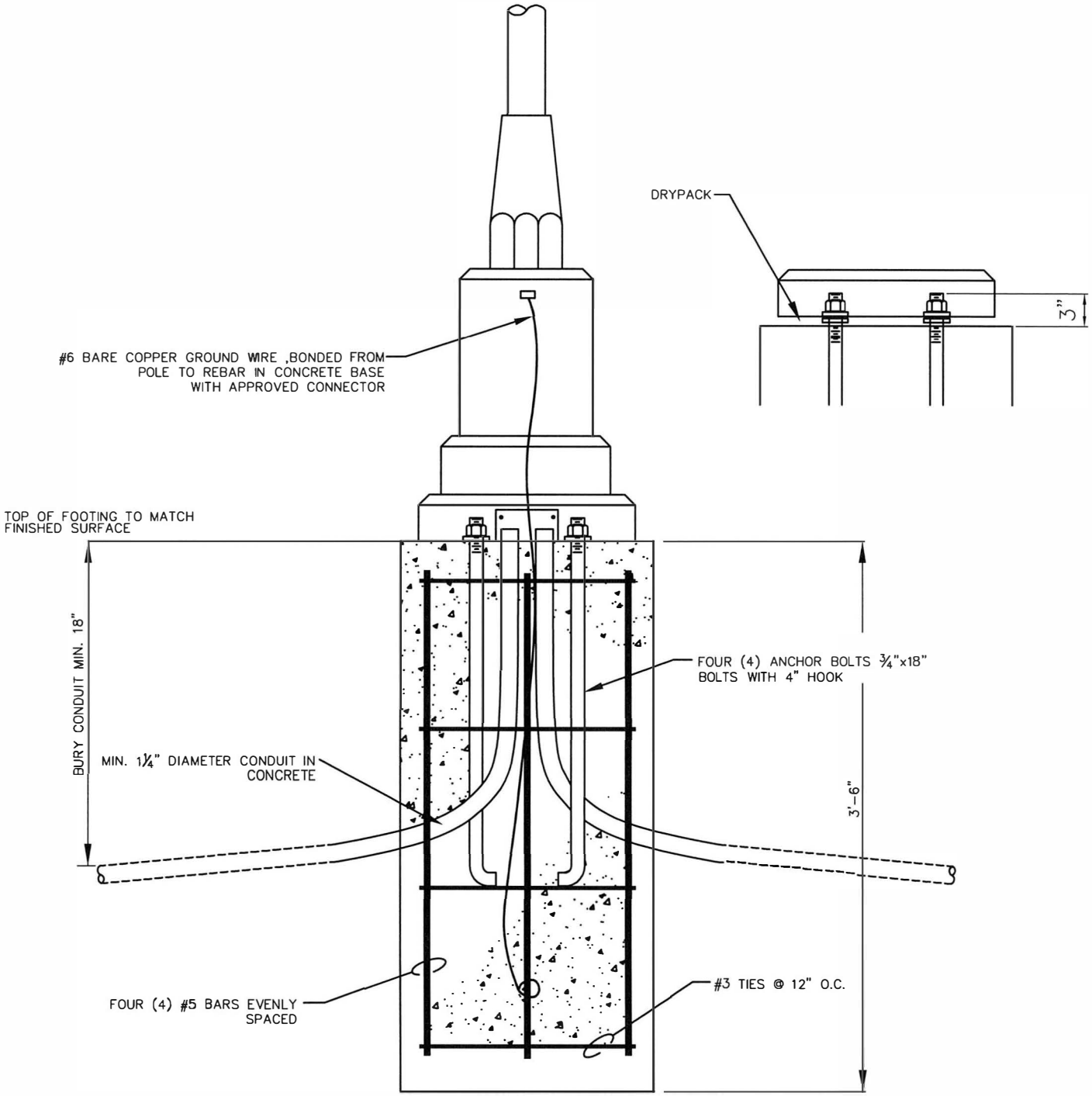

NOTES:

1. GROUND LIGHT POLE BASES PER MANUFACTURER'S RECOMMENDATIONS. ALL GROUNDING MATERIAL AND LABOR TO BE INCLUDED IN PRICE OF BASE.
2. SET ANCHOR BOLTS WITH THREADS ENTIRELY EXPOSED OR 3" OF THREADS EXPOSED.

LIGHT POLE BASE

SCALE: NONE

CONSTRUCTION STANDARDS CITY OF WHITEFISH	LIGHT POLE BASE DETAIL	SD-47f

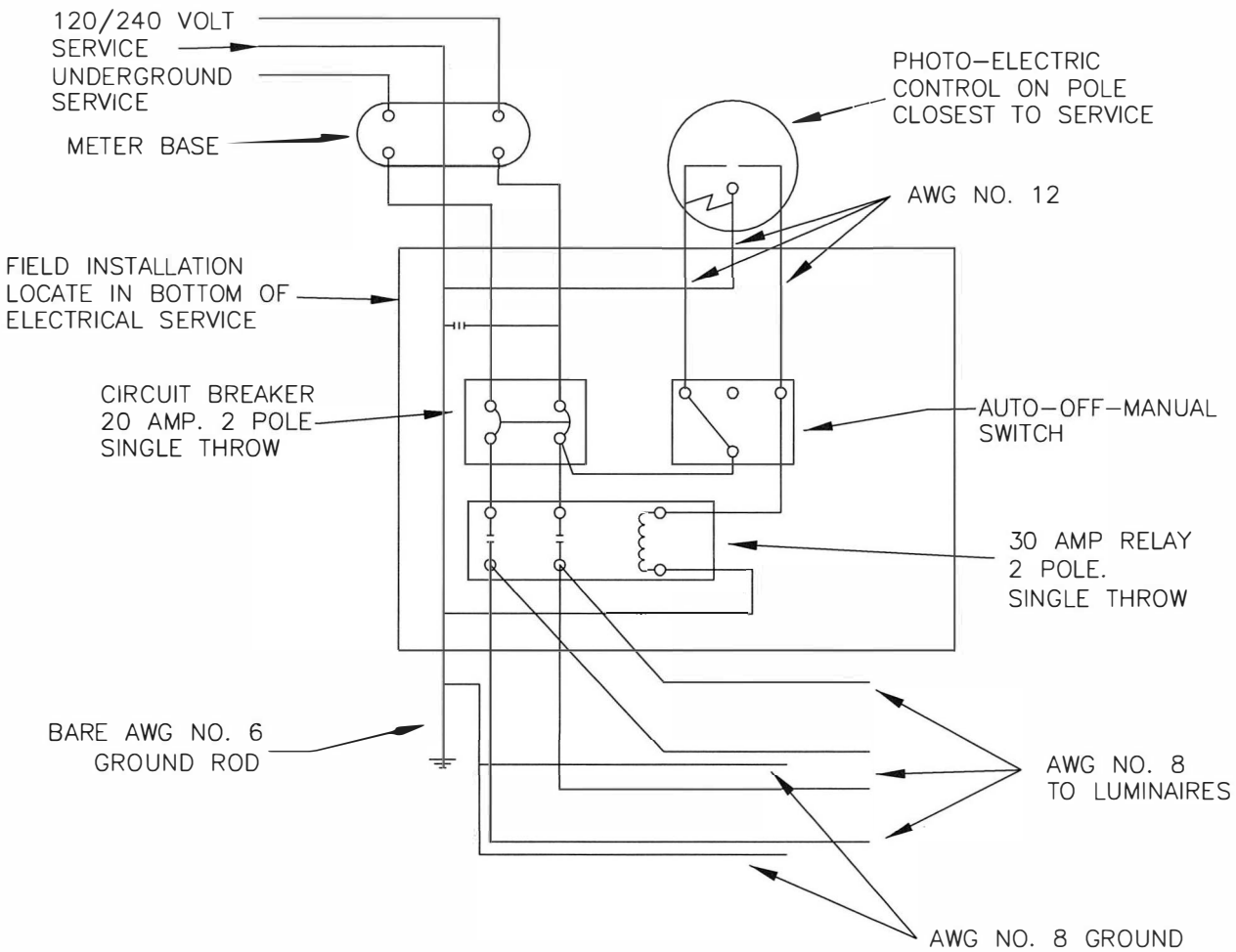

SERVICE:	CIRCLE AW / B-LINE #CMP411 MC-1 WITH BASE #MB1515 BASE SHALL BE INCLUDED FOR ALL SERVICE INSTALLATIONS
CIRCUIT BREAKERS:	USE ITE Q 120, Q 220 AS NEEDED CONTACTOR AND SELECTOR SWITCH FIELD INSTALLED IN SERVICE PEDESTAL BELOW CIRCUIT BREAKERS
CONTACTOR:	LIGHTING CONTACTOR SHALL BE SQUARE D BRAND #8903-LO40-V02 SERIES (OR EQUAL)
SELECTOR SWITCH:	SQUARE D #9001 KS-43 BH13 - SEL. SW. 9001 KN-260-H.O.A. - LEGEND PLATE (OR EQUAL)
PHOTO CONTROL:	MULTI #P2275 (OR EQUAL) LOCATED IN CLOSEST POLE WITH PHOTO CONTROL RECEPTACLE
POLE FUSE KIT:	EACH LUMINAIRE FUSE KIT SHALL HAVE TWO (2) WATERTIGHT BREAK AWAY STYLE FUSE HOLDERS WITH DUAL ELEMENT 3 AMP MIDGET FUSES. HOMAC BRAND FUSE HOLDER #SLK-MD (OR EQUAL) WITH BUSSMANN FUSE #FNM-3 (OR EQUAL)

LIGHTING NOTES:

Section 1600

Electrical Specifications for Decorative Street Lights

Revised: 12-13-07

Before Construction:

Contact The City of Whitefish, Public Works Department Electrician – at 406-863-2454 for wiring "Information Packet" and "List of Substitution Equals".

Inspections:

1) Call for electrical conduit rough-in inspection before covering conduits.

2) Call for electrical final inspection and complete working test before project sign-off (project will not be complete until working test is finalized).

3) Inspection contact number: 406-863-2454 or 406-253-6183

Conduits and Ground Boxes:

1) Minimum size conduit to be used is 1 ¼" Schedule 40 PVC buried at a depth of not less than 18". Conduit runs from power source to service assembly shall be 2-inch schedule 40 PVC conduit.

2) Conduit **shall** follow behind curb on boulevard side where practical. Conduit **shall** be placed no more than 6" from curb.

3) Ground boxes **shall** be of concrete material, Type I or II, and installed flush with finished grade. Ground boxes shall be arranged to drain (gravel bottom etc.).

Wiring Methods:

1) Wire installed in conduit runs **shall** not be smaller than #8 THHN copper stranded conductor.

2) Wire installed in poles from base to luminaire **shall** be **#10 THHN** copper stranded conductor.

3) Ground box splices **shall** be made water tight.

Pole and Luminaire Ordering:

1) Pole and Luminaire ordering information :
Hadco Brand Special Model Number (specific to City of Whitefish)
C2316 = Luminaire
CP2316 = Pole

Pole Installation and Wiring:

1) Poles **shall** be installed plumb and level.

2) Anchoring bolts and nuts shall be corrosion resistant and installed with an anti seize compound on threads.

3) After installation, pole bases **shall** be grouted solid to concrete standard.

4) Each Luminaire **shall** have two (2) water tight break away fuse holders with dual element 3 Amp midget fuses. Homac brand fuse holder #SLK-MD, (or equal) with Bussmann brand fuse #FNM-3, (or equal).

5) Lamp shall be 50W HPS (High Pressure Sodium) Clear Medium Base:

G.E. #LU50/MED
Sylvania #LU50/MED
Philips #C50S68/M

6) Wiring installed from base to Luminaire **shall** be **#10 THHN** copper conductor.

Service Ordering Guide:

Service shall be 100Amp, 120/240Volt, 1 Phase:
1) Circle AW/B-Line Brand # CMP4111, MC-1 With Base # MB1515
2) Milbank Brand # CP3B-DXX With Base # CP-16PDMNT-CALT

Spacing of Lights on Residential Streets:

Decorative lights shall be spaced every 150 to 180 feet along residential streets. If necessary the spacing may extend in some areas to 200 feet. The light location should alternate from side to side of the street. Lights shall be placed a minimum of 3 feet from the back of curb. Residential street lights must be the type shown in Detail No. 1 and the lighting plan sheet must be done to scale.

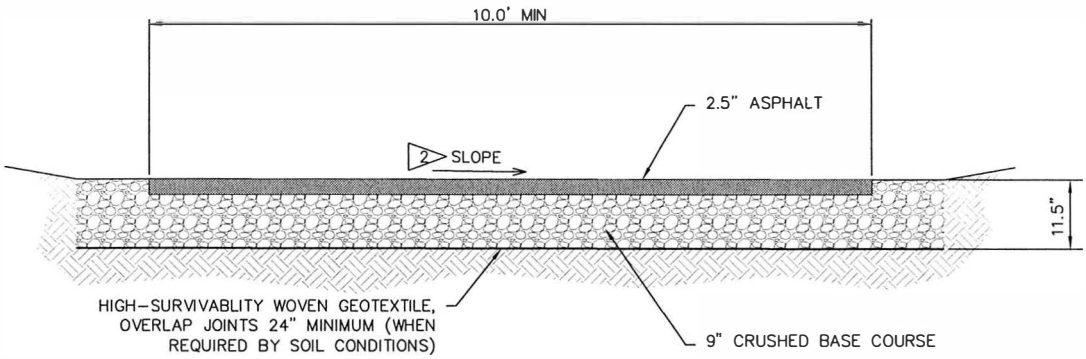

ASPHALT

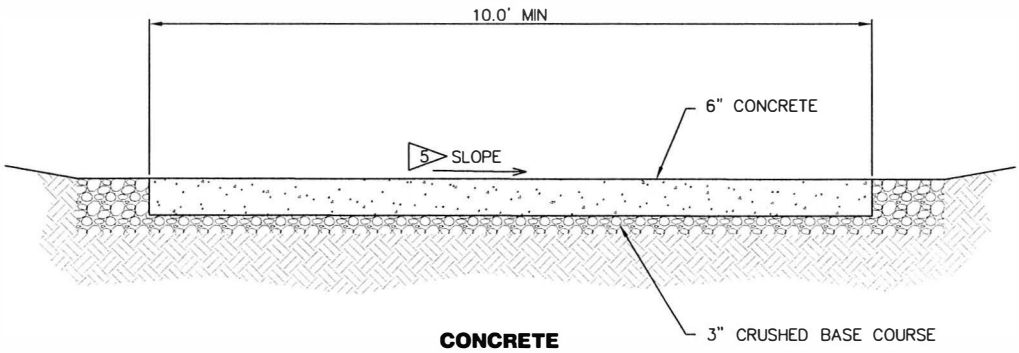

CONCRETE

BIKE PATH

SCALE: NONE

DETAIL NOTES:

1. BIKE PATHS SHALL BE DESIGNED TO SUPPORT A MINIMUM 12,500 POUNDS.
2. ASPHALT PATHS SHALL BE A MINIMUM OF 10 FEET WITH A CROSS SLOPE OF 2.0% AND A 1 FOOT WIDE GRAVEL BORDER ALONG EACH EDGE. THE MINIMUM WIDTH MAY BE REDUCED TO 8 FEET WITH THE APPROVAL OF THE CITY OF WHITEFISH.
3. PATH BED SHALL CONSIST OF A MINIMUM 9 INCHES OF CRUSHED GRAVEL COMPACTED TO 95% OF MAXIMUM DENSITY AS DETERMINED BY AASHTO T99, UNLESS OTHERWISE DICTATED BY SUB-SOIL TYPE MATERIALS BEING COMPACTED TO ROAD STANDARD.
4. THE OVERLAY SHALL CONSIST OF 2.5 INCHES OF ASPHALT COMPACTED TO 93% OF MAXIMUM DENSITY, AS DETERMINED BY ASTM D-2041. CONSTRUCTION SEAL SHALL BE APPLIED AT 0.08 GALLONS/SQUARE YARD AFTER INSTALLATION.
5. CONCRETE PATHS SHALL BE A MINIMUM OF 10 FEET WITH A CROSS SLOPE OF 2.0%. THE MINIMUM WIDTH MAY BE REDUCED TO 8 FEET WITH THE APPROVAL OF THE CITY OF WHITEFISH.
6. PATH BASE SHALL CONSIST OF A MINIMUM OF 3 INCHES OF CRUSHED GRAVEL COMPACTED TO 95% OF MAXIMUM DENSITY AS DETERMINED BY AASHTO T-99. CONCRETE SHALL BE A MINIMUM OF 6 INCHES OF M4000 REINFORCED WITH 1.5 lbs. PER CUBIC YARD OF FIBER MESH.
7. WHERE TERRAIN ALLOWS, SLOPE OF THE PATH SHOULD NOT EXCEED 12:1.

SYMBOL: ——— PEV ———

PRESERVATION OF EXISTING VEGETATION SS-2:

PRESERVATION OF EXISTING VEGETATION IS THE IDENTIFICATION AND PROTECTION OF DESIRABLE VEGETATION THAT PROVIDES EROSION AND SEDIMENT CONTROL BENEFITS. PROVIDE PRESERVATION OF EXISTING VEGETATION PRIOR TO COMMENCEMENT OF CLEARING AND GRUBBING OPERATIONS OR OTHER SOIL DISTURBING ACTIVITIES. MARK THE AREA AS DESIGNATED ON THE CONSTRUCTION PLANS USING TEMPORARY FENCING MADE OF ORANGE POLYPROPYLENE THAT IS STABILIZED AGAINST ULTRAVIOLET LIGHT. AFFIX FENCING TO METAL "T" POST USING 11 GAGE WIRE. PLACE FENCING AN ADEQUATE DISTANCE FROM TREES AND BUSHES TO PREVENT ROOT AND IRRIGATION SYSTEM DAMAGE.

UPON WRITTEN APPROVAL BY THE ENGINEER, THE CONTRACTOR MAY BE ALLOWED TO FLAG OR VERBALLY DESIGNATE AREAS OF EXISTING VEGETATIVE PRESERVATION.

PRESERVATION OF EXISTING VEGETATION MAY BE USED IN CONJUNCTION WITH VEGETATIVE BUFFER (SS-14), WIND EROSION CONTROL (WE-1) AND SNOW ACCUMULATION (SN-1).

FOLLOW CLEAR ZONE REQUIREMENTS FOR ALL FENCING PLACED WITHIN THE CLEAR ZONES.

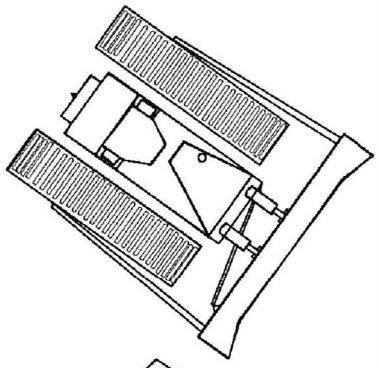

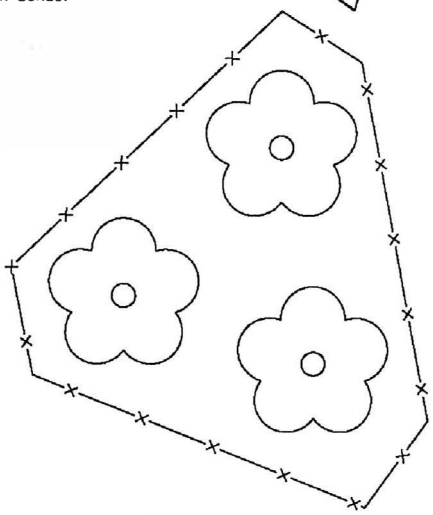

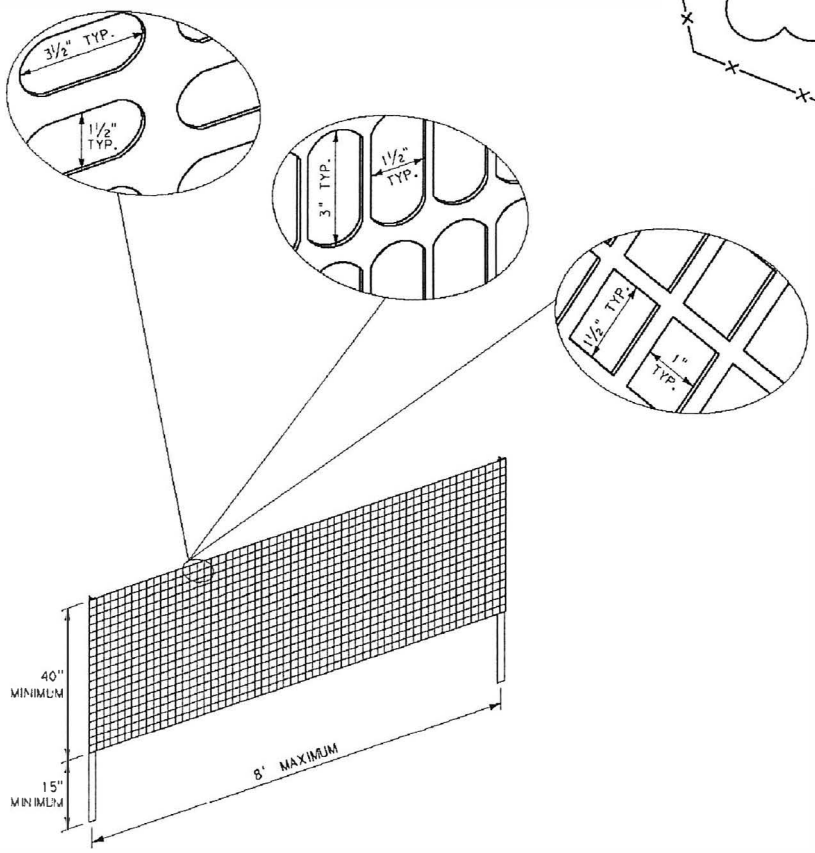

DETAILED DRAWING	
REFERENCE STANDARD SPEC. SECTION 208	DWG. NO. 208-02
PRESERVATION OF EXISTING VEGETATION (SS-2)	
EFFECTIVE: FEBRUARY 2005	
serving you with pride	MONTANA DEPARTMENT OF TRANSPORTATION

Sediment/Desilting Basin

SC-2

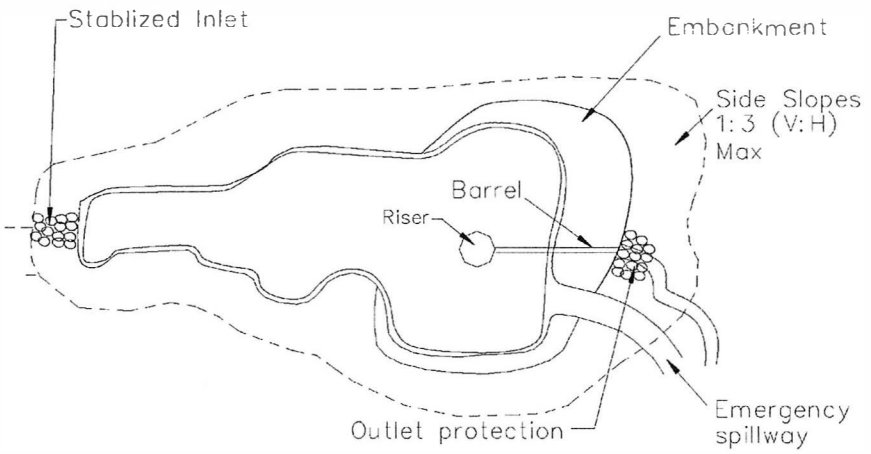

TOP VIEW

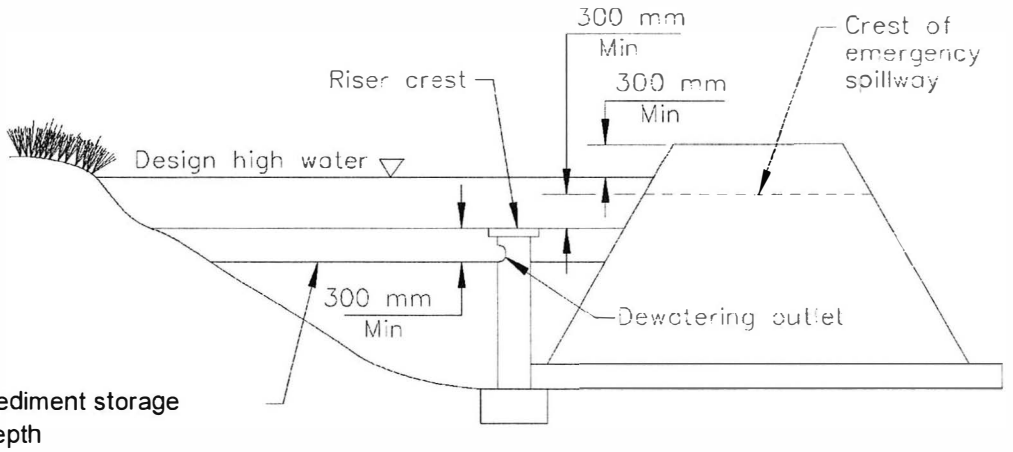

Sediment storage
depth
permanent pool

This outlet provides no drainage
for permanent pool.

FIGURE 1: SINGLE ORIFICE DESIGN
NOT TO SCALE

CONSTRUCTION STANDARDS
CITY OF WHITEFISH

TEMPORARY SEEDING

SD-51

SYMBOL: ——— TS ———

TEMPORARY SEEDING SS-4:

TEMPORARY SEEDING IS THE ESTABLISHMENT OF A TEMPORARY VEGETATIVE COVER BY SEEDING WITH CEREAL BARLEY. USE TEMPORARY SEEDING ON AREAS 3:1 OR FLATTER THAT WILL BE EXPOSED FOR LONGER THAN 14 DAYS AND THAT WILL UNDERGO FURTHER DISTURBANCE. EXCLUDE ROCK SLOPES THAT CANNOT BE EXCAVATED BY RIPPING.

SEEDING DATES AND APPLICATION RATES ARE AS FOLLOWS:

APR. 1 TO JUN. 30: CEREAL BARLEY AT 12 LB./ACRE
JUL. 1 TO AUG. 31: TEMPORARY SEEDING NOT RECOMMENDED
SEP. 1 TO NOV. 15: CEREAL BARLEY AT 12 LB./ACRE

DO NOT TEMPORARY SEED FROM SEP. 1 TO NOV. 15 IF THE AREA IS TO BE PERMANENTLY SEEDED THAT FALL.

CONTACT THE MDT AGRONOMIST, THROUGH THE ENGINEER, PRIOR TO USING SUBSTITUTIONS OR PLACING TEMPORARY SEEDING OUTSIDE THESE DATES. DRILL SEED SLOPES OF 3:1 OR FLATTER. FOR SLOPES STEEPER THAN 3:1, REFER TO EROSION SEEDING.

ANY TEMPORARY SEEDING EFFORTS THAT DO NOT PROVIDE ADEQUATE COVER MUST BE RE SEEDED AS REQUIRED BY THE ENGINEER.

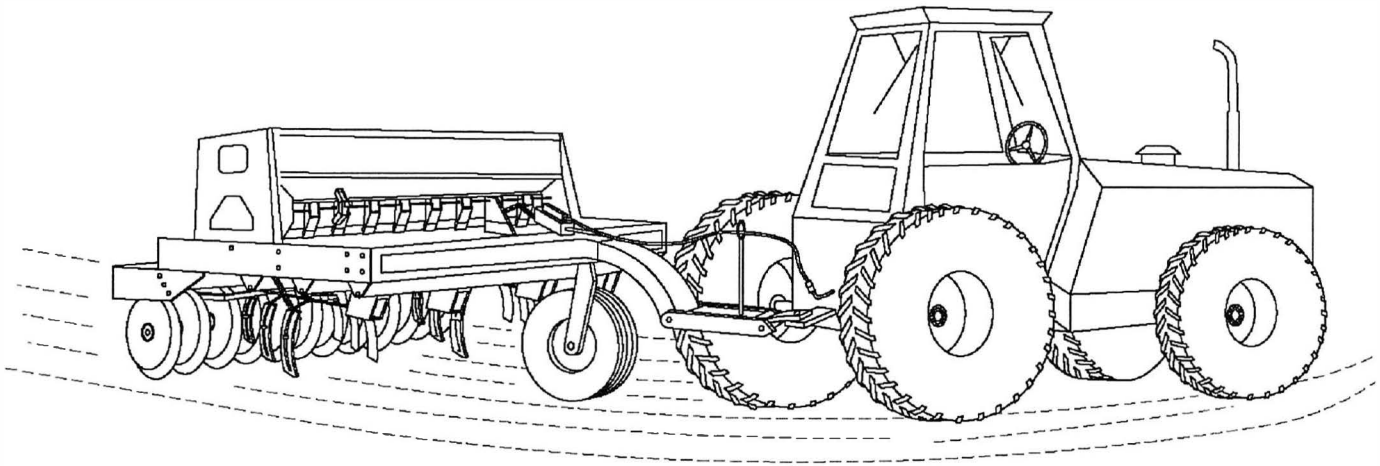

SLOPES 3:1 OR FLATTER

DETAILED DRAWING	
REFERENCE STANDARD SPEC. SECTION 208	DWG. NO. 208-06
TEMPORARY SEEDING (SS-4)	
EFFECTIVE: FEBRUARY 2005	
serving you with pride	MONTANA DEPARTMENT OF TRANSPORTATION

C:\Drawing Files\CONSTRUCTION STANDARDS\DETAILS 8-13-2008\SD-51.dwg Feb 10, 2009

SYMBOL: ——— SM ———

STRAW MULCH SS-6:

STRAW MULCH CONSISTS OF PLACING A UNIFORM LAYER OF STRAW AND ANCHORING IT INTO THE SOIL WITH A STUDDED ROLLER OR DISK OR BINDING THE STRAW TOGETHER WITH AN ENGINEER APPROVED TACKIFIER.

USE STRAW MULCH FOR SOIL STABILIZATION AS A TEMPORARY SURFACE COVER ON DISTURBED AREAS UNTIL SOILS CAN BE PREPARED OR RE-VEGETATION/PERMANENT VEGETATION IS ESTABLISHED. STRAW MULCH IS COMMONLY USED IN COMBINATION WITH TEMPORARY SEEDING, BMPs SS-4 & SS-15, AND/OR PERMANENT SEEDING TO ENHANCE PLANT ESTABLISHMENT.

ALL STRAW MULCH IS REQUIRED TO BE CERTIFIED WEED FREE AND DERIVED FROM WHEAT, BARLEY OR RICE. ENGINEERS APPROVAL IS REQUIRED PRIOR TO ANY PLACEMENT OF STRAW MULCH.

STRAW MULCH CAN BE APPLIED BY HAND OR BLOWN UNDER LOW WIND CONDITIONS. OBTAIN ENGINEERS APPROVAL FOR PLACEMENT METHODS PRIOR TO PLACEMENT. EVENLY DISTRIBUTE STRAW MULCH AT A MINIMUM LOOSE RATE OF 4000 LB./ACRE. IMMEDIATELY FOLLOWING PLACEMENT, CRIMP OR APPLY TACKIFIERS TO RETAIN MULCH. CRIMP USING DISKS OR A PUNCH-TYPE ROLLER. IF TACKIFIERS ARE USED, FOLLOW GUIDELINES PROVIDED IN BMP SS-5. WHEN EITHER TEMPORARY OR PERMANENT SEEDING IS COMBINED WITH THE STRAW MULCH BMP, COMPLETE SEEDING OPERATIONS PRIOR TO STRAW MULCH PLACEMENT. REFER TO BMPs SS-4 AND SS-15 FOR SEEDING GUIDELINES.

REAPPLICATION OF STRAW MULCH AND TACKIFIER MAY BE REQUIRED BY THE ENGINEER TO MAINTAIN EFFECTIVE SOIL STABILIZATION OVER DISTURBED AREAS AND SLOPES.

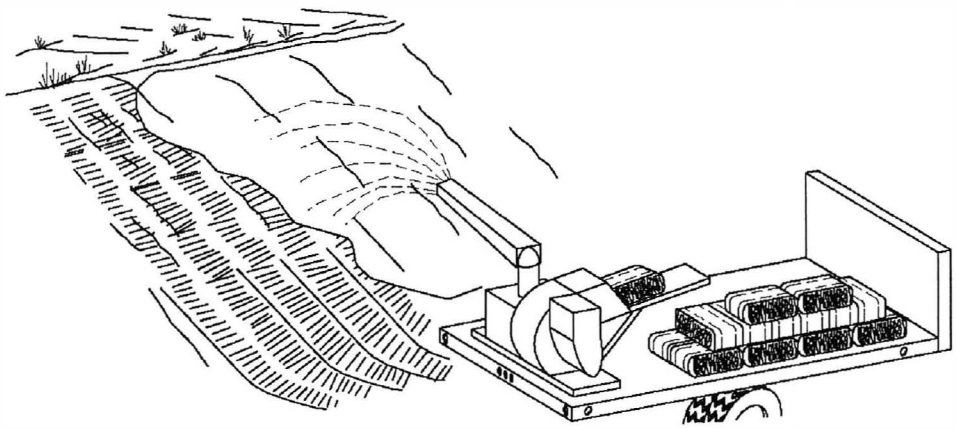

STRAW BLOWER

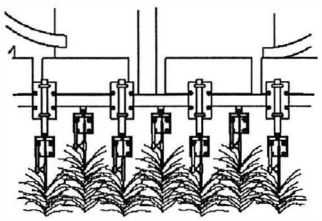

STRAW CRIMPING

DETAILED DRAWING	
REFERENCE STANDARD SPEC. SECTION 208	DWG. NO. 208-10
STRAW MULCH (SS-6)	
EFFECTIVE: FEBRUARY 2005	
serving you with pride — MONTANA DEPARTMENT OF TRANSPORTATION	

SYMBOL: ——— HM ———

HYDRAULIC MULCH SS-3:

HYDRAULIC MULCH CONSISTS OF APPLYING A MIXTURE OF SMALL PIECES OF CELLULOSE FIBERS WHICH CAN BE MADE FROM SHREDDED WOOD FIBERS OR RECYCLED PAPER AND A STABILIZING EMULSION AND TACKIFIER (SUBJECT TO ENGINEERS DISCRETION) USING HYDRO-MULCHING EQUIPMENT. HYDRAULIC MULCH IS APPLIED TO DISTURBED AREAS REQUIRING TEMPORARY PROTECTION UNTIL PERMANENT VEGETATION IS ESTABLISHED OR DISTURBED AREAS THAT MUST BE RE-DISTURBED FOLLOWING AN EXTENDED PERIOD OF INACTIVITY.

APPLY HYDRAULIC MULCH A MINIMUM OF 24 HOURS PRIOR TO A STORM EVENT TO ALLOW FOR ADEQUATE DRYING.

HYDRAULIC MULCH SELECTION MUST MEET MDT SPECIFICATIONS AND BE APPROVED BY THE ENGINEER PRIOR TO PLACEMENT. ROUGHEN EXISTING EMBANKMENT FOLLOWING GUIDELINES SPECIFIED IN BMP SS-12. WHEN EITHER TEMPORARY SEEDING OR PERMANENT SEEDING IS COMBINED WITH THE HYDRAULIC MULCH BMP, COMPLETE SEEDING OPERATIONS PRIOR TO HYDRAULIC MULCHING OPERATIONS. REFER TO BMPs SS-4 AND SS-5 FOR SEEDING REQUIREMENTS. REMOVE ANY OVER SPRAY FROM ROADWAYS OR SIDEWALKS IMMEDIATELY FOLLOWING APPLICATION.

REAPPLY HYDRAULIC MULCH TO ANY DISTURBED AREAS FOLLOWING A RAIN EVENT OR RESULTING FROM CONSTRUCTION ACTIVITIES.

RECYCLED PAPER MULCH SHOULD CONTAIN 100% POST CONSUMED PAPER.

REFER TO BMP SS-5 (SOIL BINDER) FOR TACKIFIER REQUIREMENTS. ADD ENVIRONMENTALLY SAFE GREEN DYE AS A VISUAL AID DURING APPLICATION.

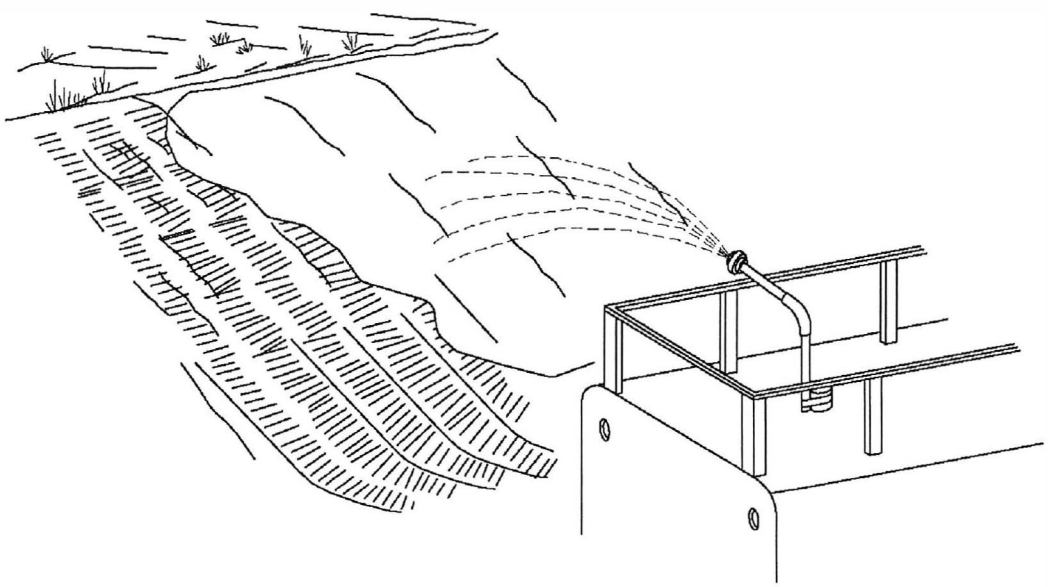

HYDRAULIC MULCH		
PRODUCT	MATERIAL	APPLICATION RATE *
PAPER-BASED HYDRAULIC MULCH	PAPER	1000 LB./ACRE (MIN)
WOOD-BASED HYDRAULIC MULCH	WOOD OR WOOD & PAPER	1000 LB./ACRE (MIN)

* APPLICATION RATES VARY WITH SLOPE & MUST BE APPROVED BY THE ENGINEER

DETAILED DRAWING	
REFERENCE STANDARD SPEC. SECTION 208	DWG. NO. 208-04
HYDRAULIC MULCH (SS-3)	
EFFECTIVE: FEBRUARY 2005	
MDT serving you with pride	MONTANA DEPARTMENT OF TRANSPORTATION

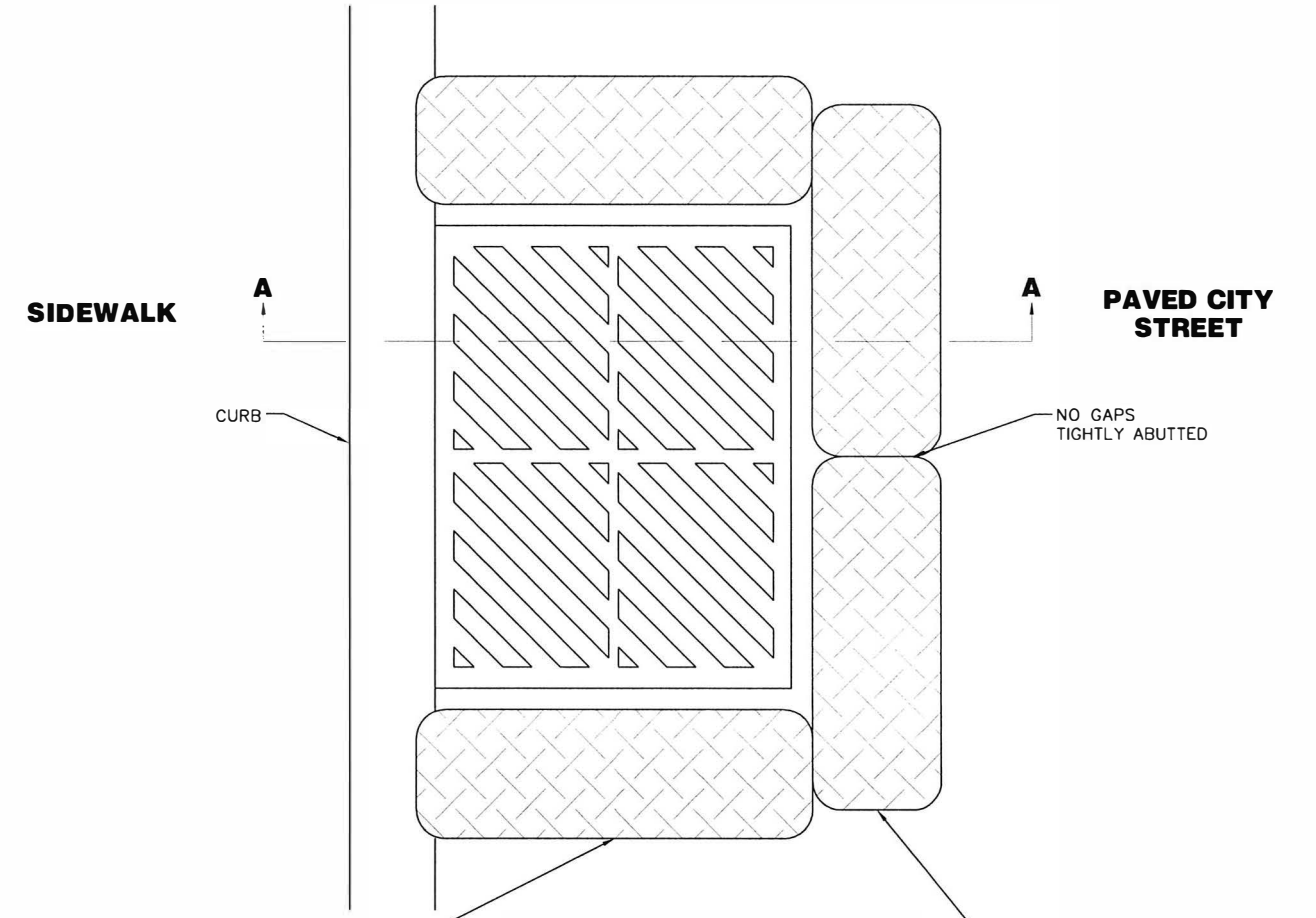

PLAN VIEW

SCALE: NONE

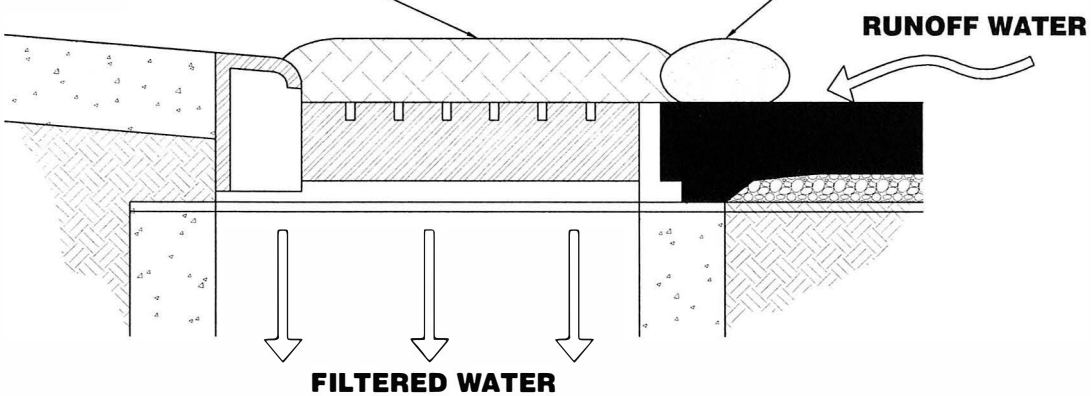

SECTION "A-A"

SCALE: NONE

THIS APPLICATION FOR PAVED STREETS.

CONSTRUCTION STANDARDS CITY OF WHITEFISH	POST-PAVING GRAVEL CURB INLET FILTER	SD-54

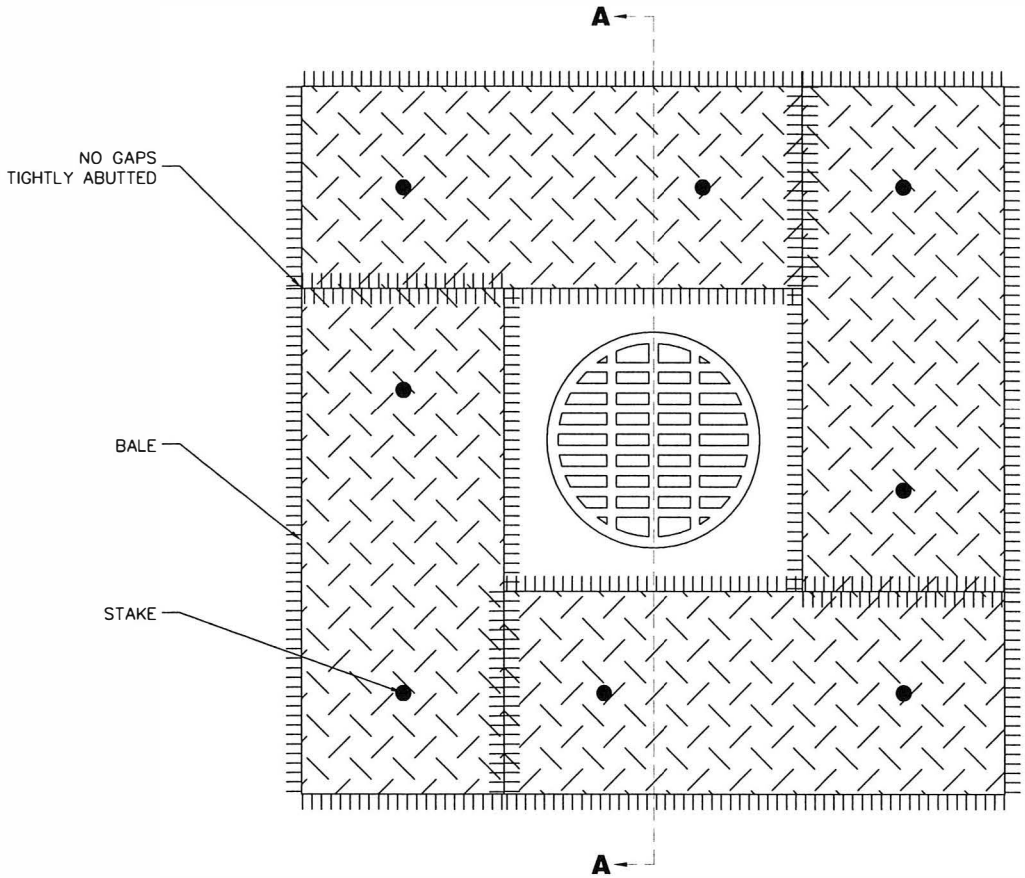

PLAN VIEW

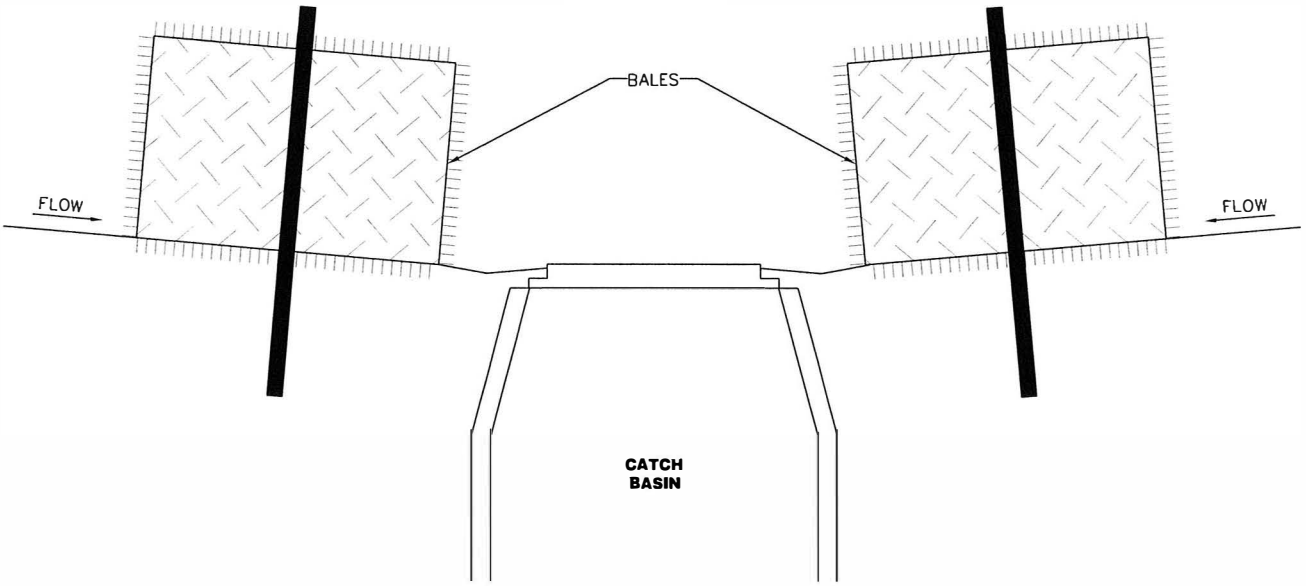

SECTION "A-A"

SCALE: NONE

DETAIL NOTES:

1. BALES ARE TO BE PLACED 4' IN THE SOIL, TIGHTLY ABUTTING WITH NO GAPS, STAKED AND BACKFILLED AROUND THE ENTIRE OUTSIDE PERIMETER.
2. NOT RECOMMENDED FOR RECEIVING CONCENTRATED FLOWS, SUCH AS STREETS OR HIGHWAY MEDIANS.

CONSTRUCTION STANDARDS CITY OF WHITEFISH	STRAW BALE SEDIMENT CONTROL	SD-55

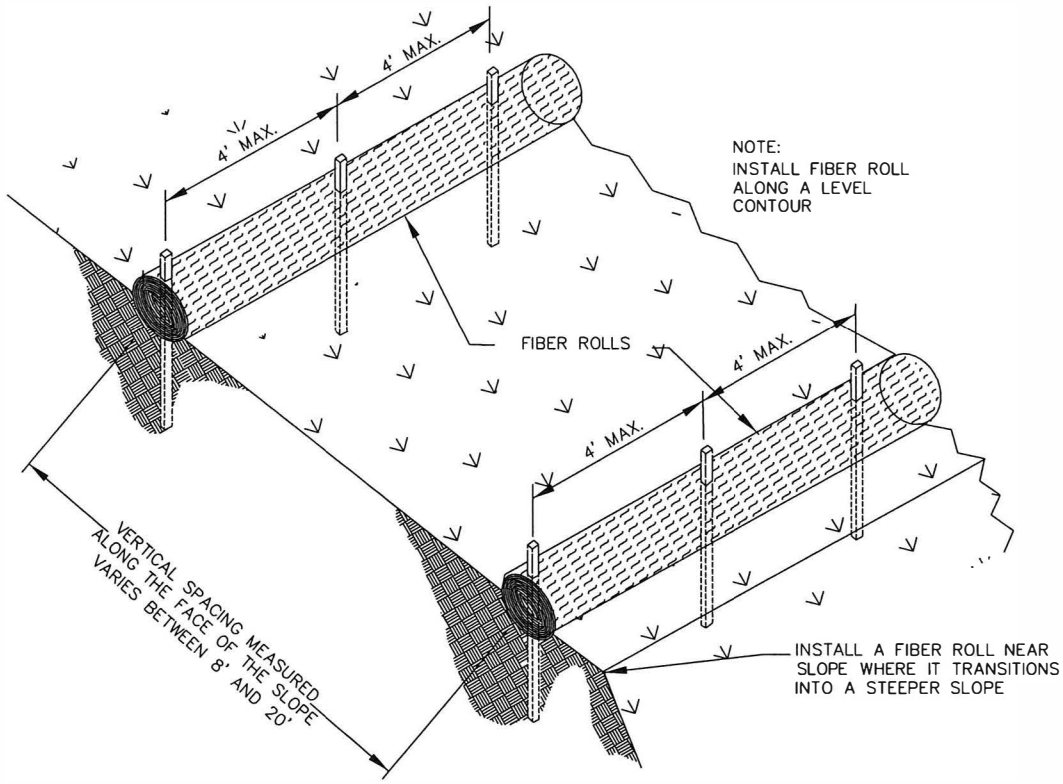

TYPICAL FIBER ROLL INSTALLATION

SCALE: NONE

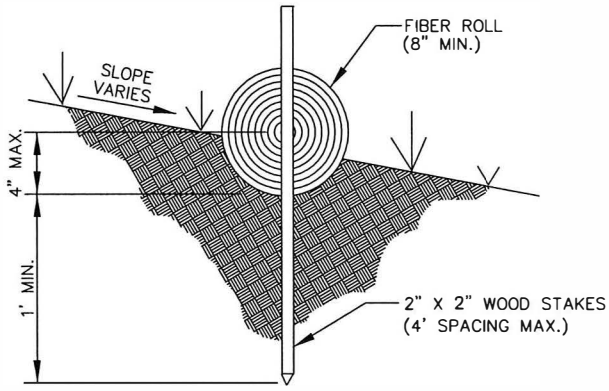

ENTRENCHMENT DETAIL

SCALE: NONE

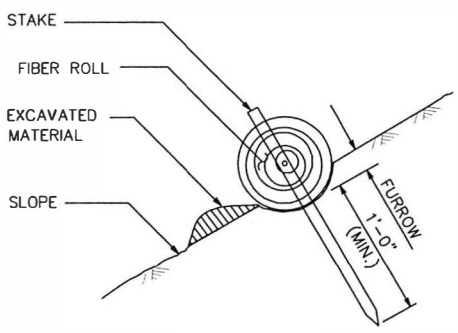

SECTION

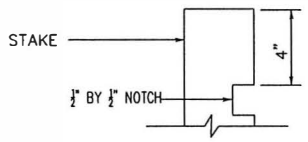

ELEVATION

STAKE NOTCH DETAIL

FIBER ROLL (TYPE 1)
SCALE: NONE

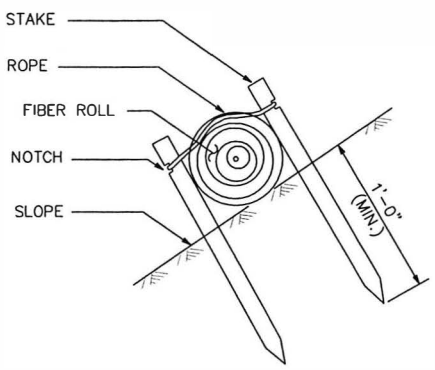

SECTION

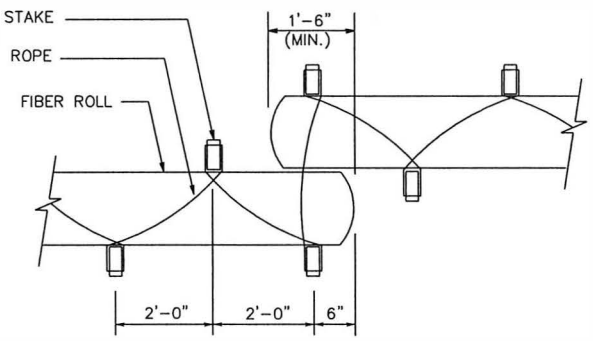

PLAN

FIBER ROLL (TYPE 2)
SCALE: NONE

CONSTRUCTION STANDARDS CITY OF WHITEFISH	EROSION CONTROL DETAILS (FIBER ROLLS)	SD-57

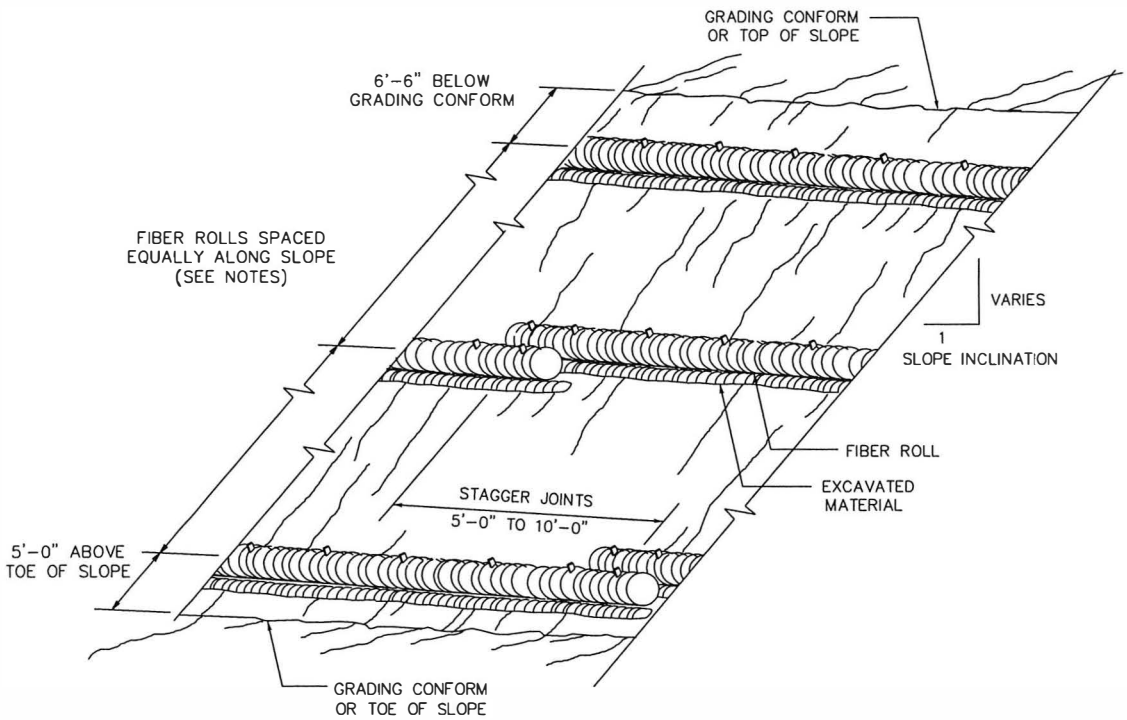

PERSPECTIVE

FIBER ROLL (TYPE 1)

SCALE: NONE

NOTES:

1. FIBER ROLL SPACING VARIES DEPENDING UPON SLOPE INCLINATION.
2. INSTALLATIONS SHOWN IN THE PERSPECTIVES ARE FOR SLOPE INCLINATION OF 10:1 AND STEEPER.

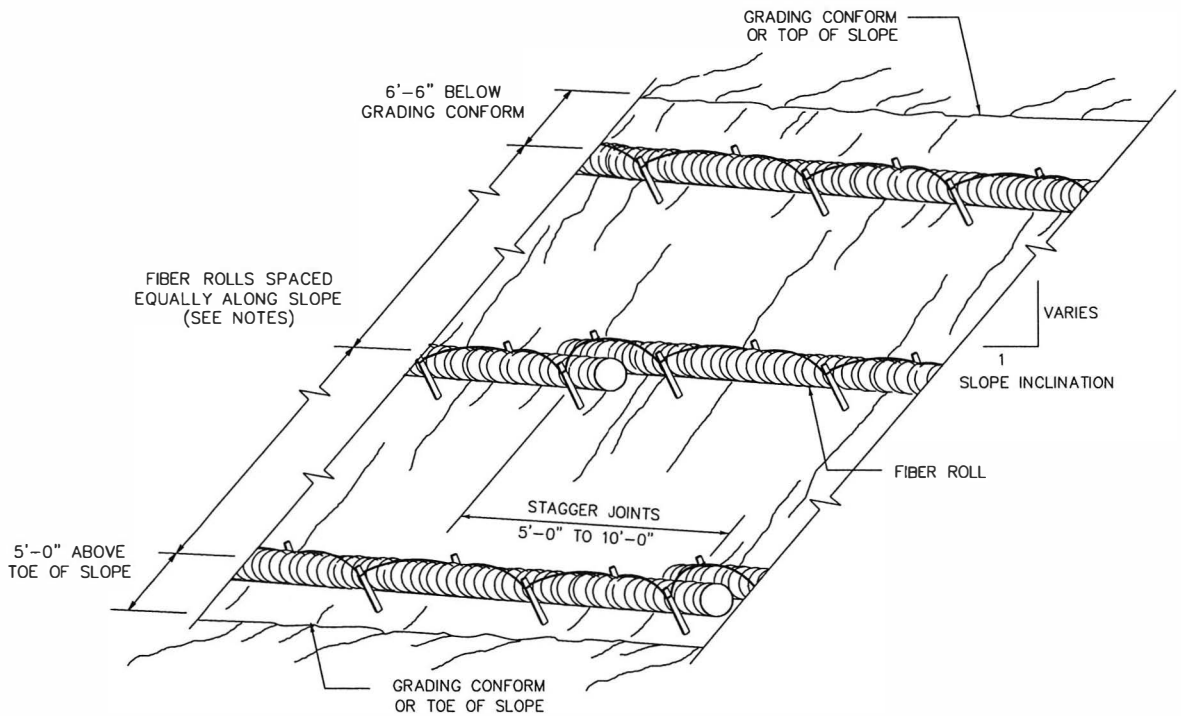

PERSPECTIVE

FIBER ROLL (TYPE 2)

SCALE: NONE

NOTES:

1. FIBER ROLL SPACING VARIES DEPENDING UPON SLOPE INCLINATION.
2. INSTALLATIONS SHOWN IN THE PERSPECTIVES ARE FOR SLOPE INCLINATION OF 10:1 AND STEEPER.

Geotextiles, Mats, Plastic Covers and Erosion Control Blankets

SS-7

Typical Installation Detail

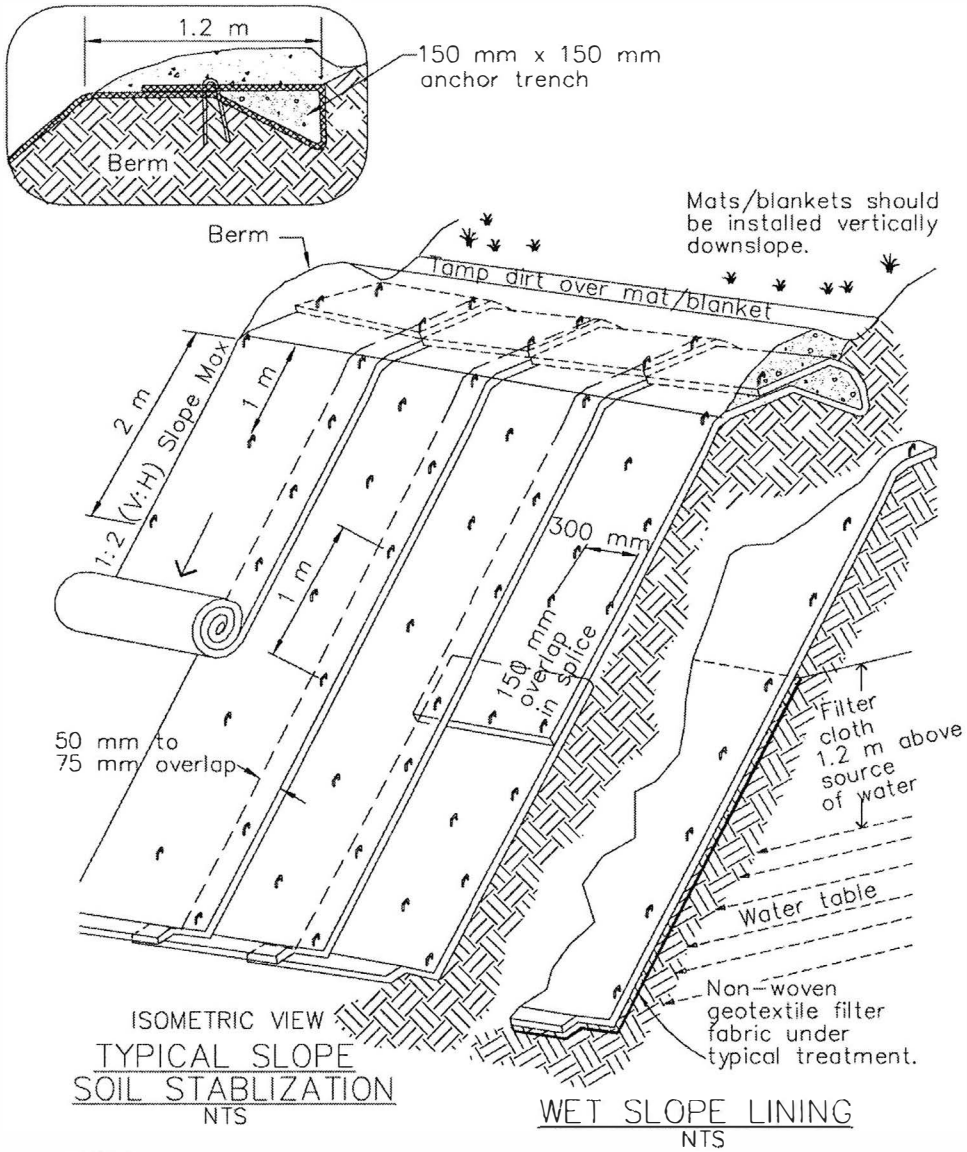

NOTES:

1. Slope surface shall be free of rocks, clods, sticks and grass. Mats/blankets shall have good soil contact.
2. Lay blankets loosely and stake or staple to maintain direct contact with the soil. Do not stretch.
3. Install per manufacturer's recommendations

Geotextiles, Mats, Plastic Covers and Erosion Control Blankets

SS-7

Typical Installation Detail

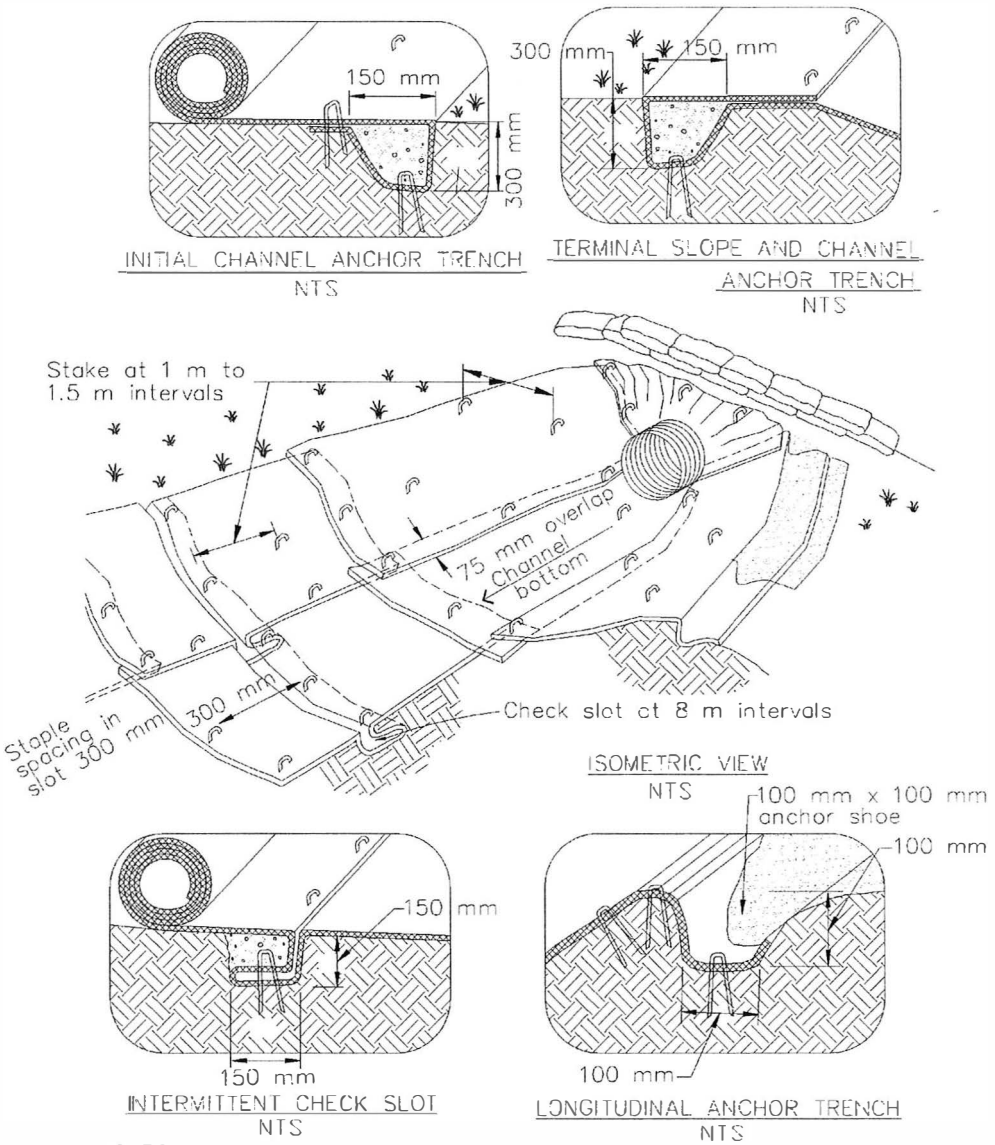

NOTES:

1. Check slots to be constructed per manufacturers specifications.
2. Staking or stapling layout per manufacturers specifications.
3. Install per manufacturer's recommendations

NARROW DITCH

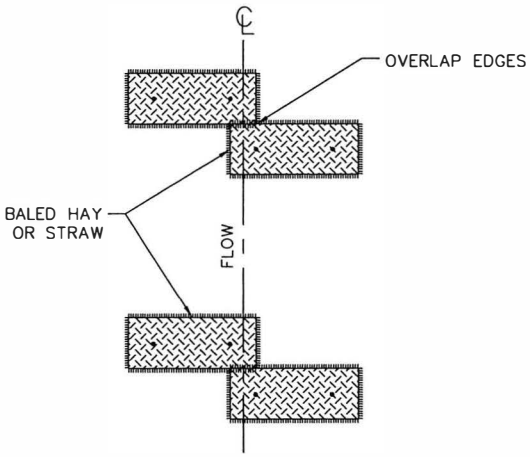

PROPER PLACEMENT OF STRAW BALE BARRIER IN SMALL SWALE

WIDE DITCH

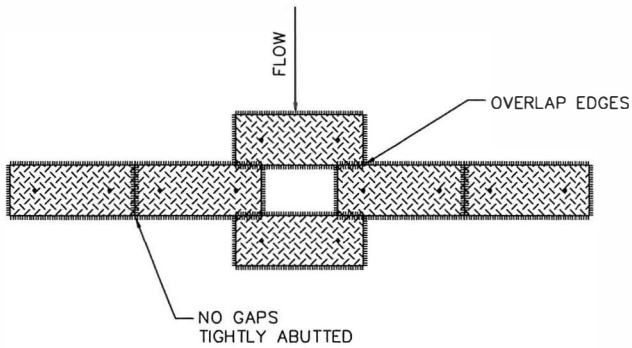

END POINTS "A" SHOULD BE HIGHER THAN POINT "B"

PLAN

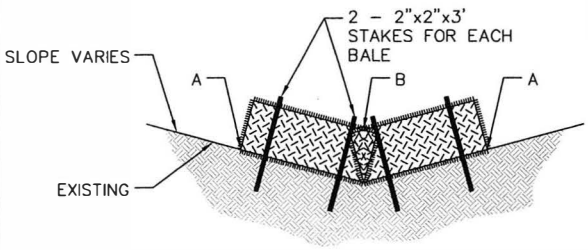

END POINTS "A" MUST BE HIGHER THAN FLOW LINE POINT "B"

PLAN

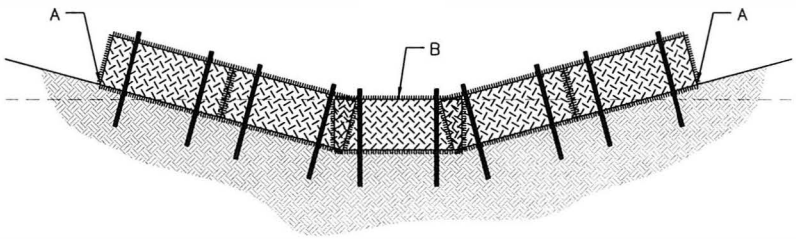

PROPER PLACEMENT OF STRAW BALE BARRIER IN DRAINAGE WAY

ELEVATION

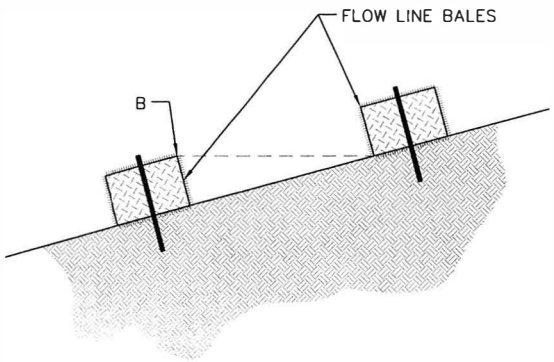

PROFILE

ELEVATION

DETAIL NOTE:

PLACE DOWNSTREAM BALES SUCH THAT POINT "B" IS APPROXIMATELY LEVEL WITH THE LOWEST ELEVATION OF THE UPSTREAM BALE.

CONSTRUCTION STANDARDS CITY OF WHITEFISH	STRAW BALE CHECK DAMS	SD-62

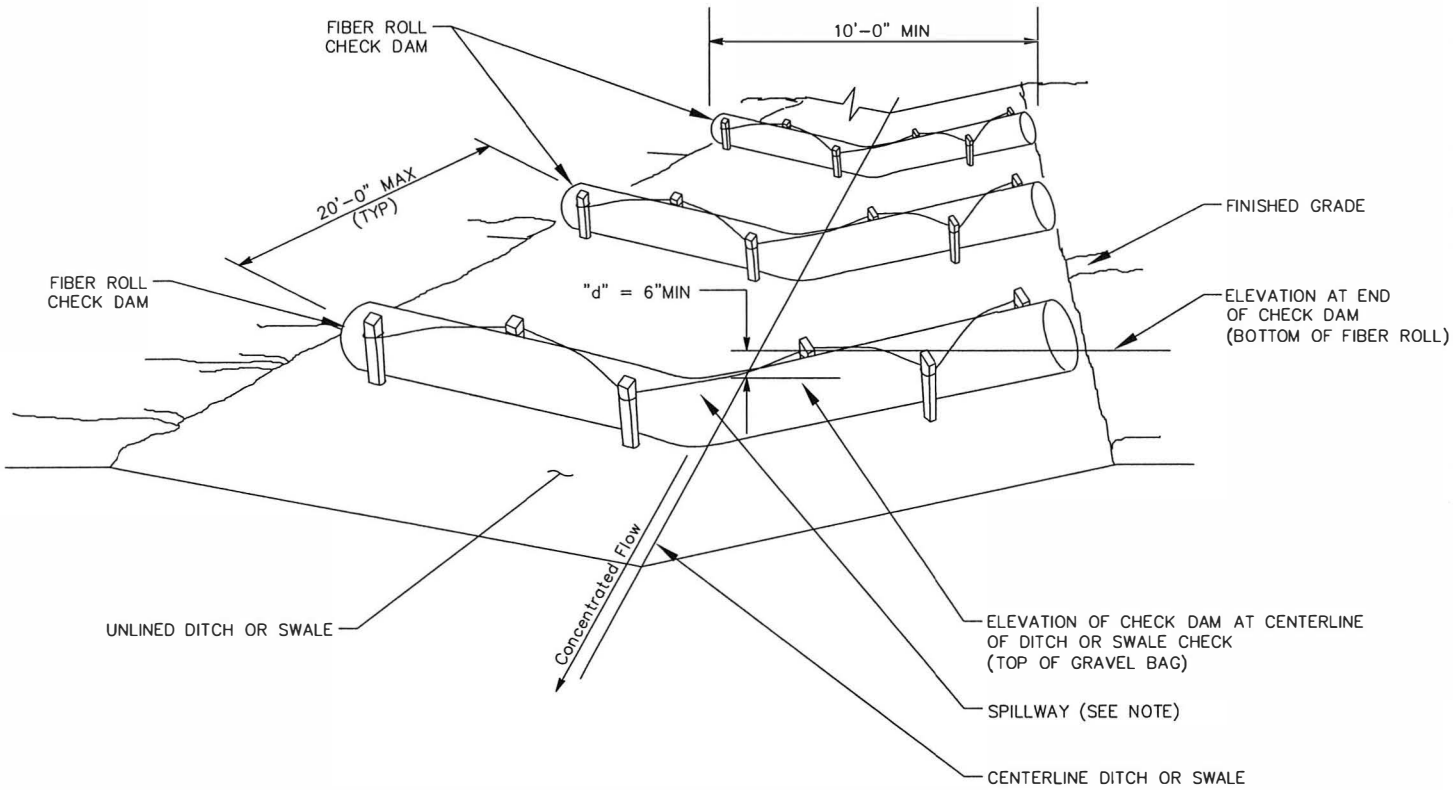

TEMPORARY CHECK DAM (TYPE 1)

SCALE: NONE

NOTE:

SPILLWAY DEPTH "d" SHALL BE MAINTAINED TO PREVENT FLANKING OF CONCENTRATED FLOW AROUND THE ENDS OF EACH CHECK DAM.

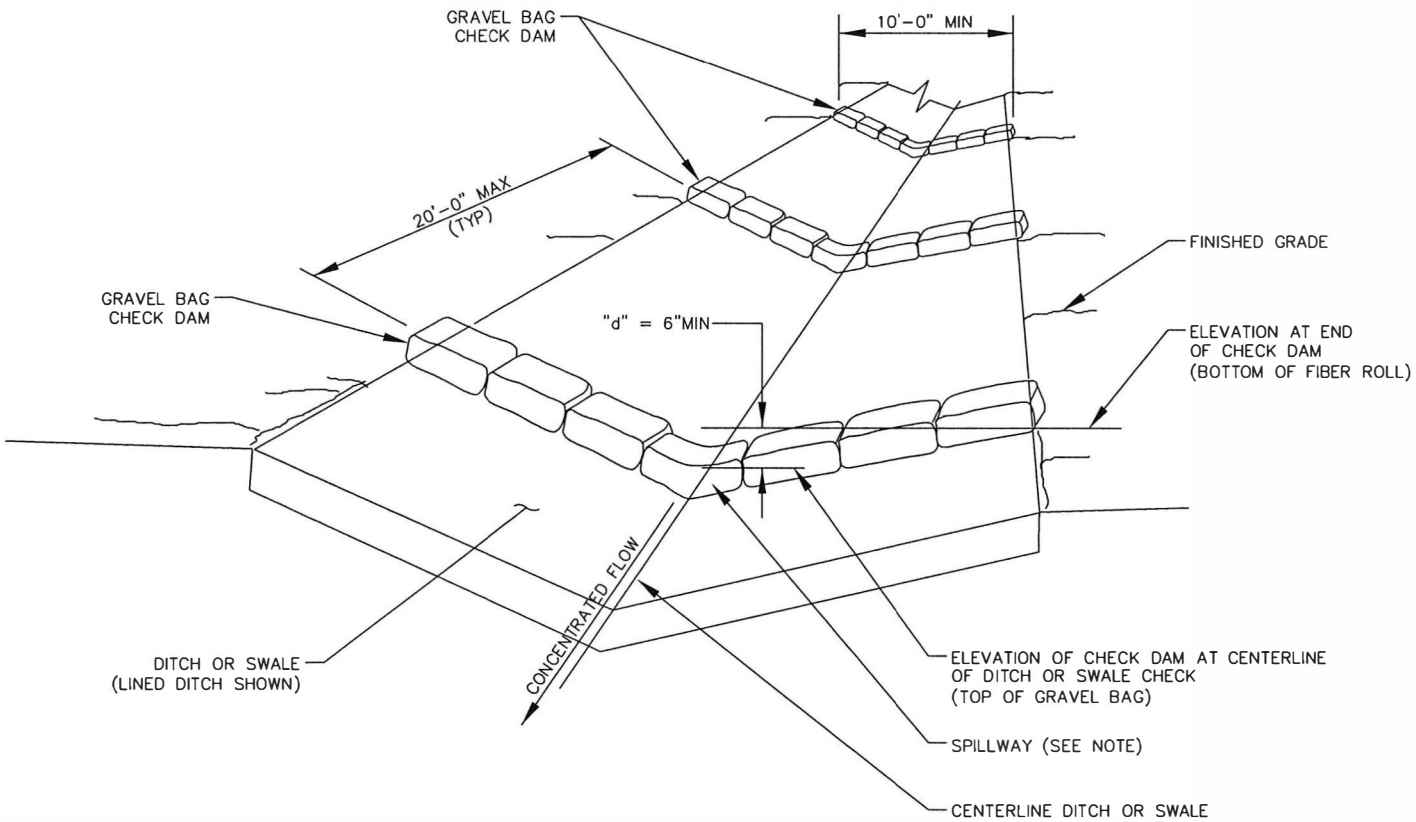

TEMPORARY CHECK DAM (TYPE 2)

SCALE: NONE

NOTE:

SPILLWAY DEPTH "d" SHALL BE MAINTAINED TO PREVENT FLANKING OF CONCENTRATED FLOW AROUND THE ENDS OF EACH CHECK DAM.

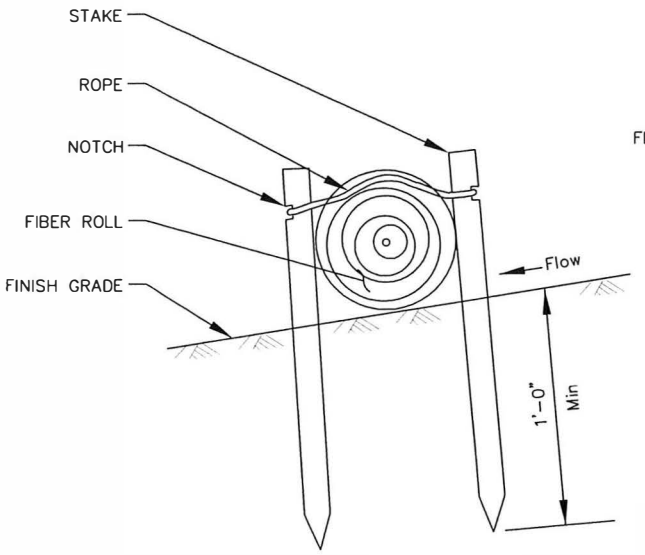

SECTION

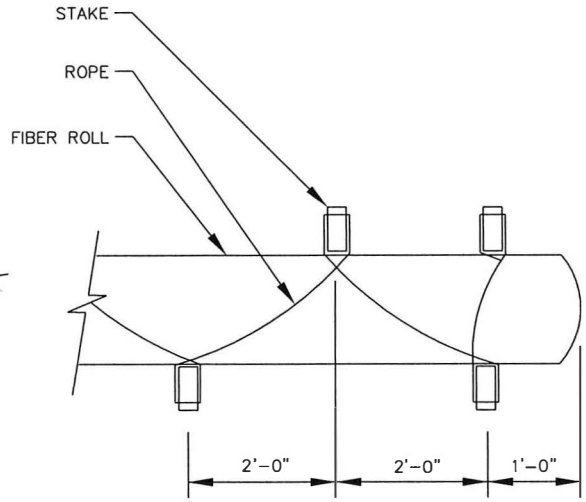

PLAN

STAKING AND LASHING DETAIL

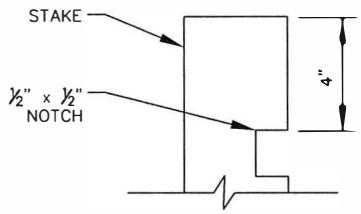

ELEVATION
STAKE NOTCH DETAIL

TEMPORARY CHECK DAM (TYPE 1)
SCALE: NONE

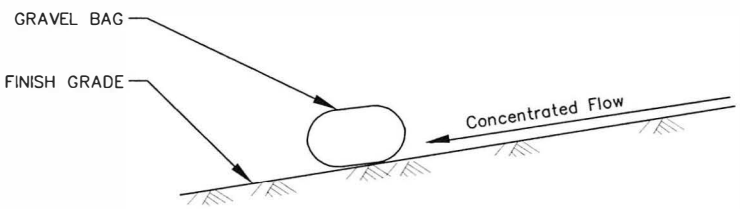

SECTION

TEMPORARY CHECK DAM (TYPE 2)
SCALE: NONE

CONSTRUCTION STANDARDS CITY OF WHITEFISH	TEMPORARY CHECK DAM DETAILS (TYPE 1 & 2)	SD-65

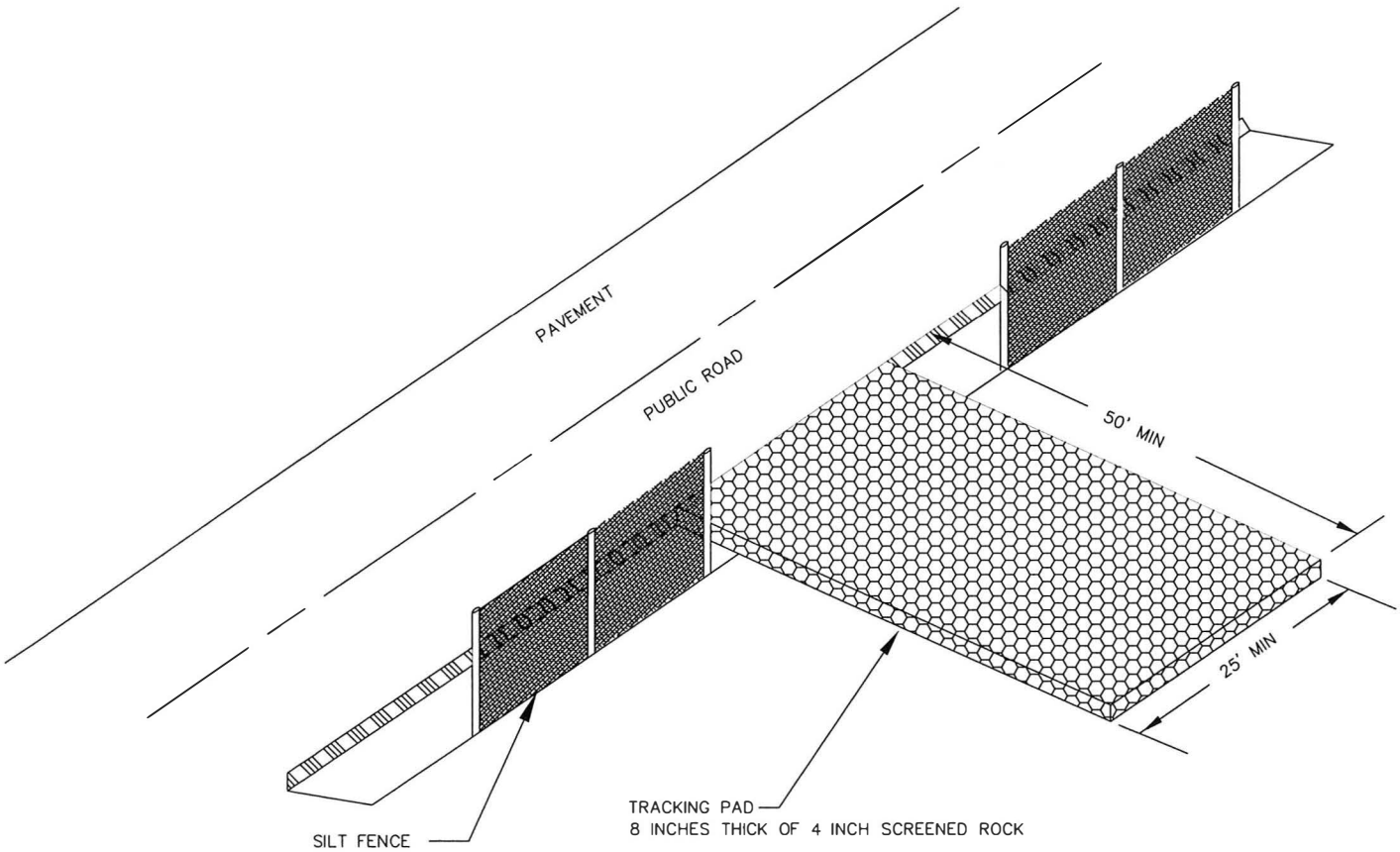

ALL VEHICLES ENTERING AND EXITING THE CONSTRUCTION SITE MUST GO ACROSS THE ROCK PAD TO PREVENT MUD AND DIRT FROM TRACKING OFFSITE. ROCK SHALL BE REPLENISHED IF TRACKING OCCURS. ALL MATERIALS SPILLED, DROPPED, WASHED OR TRACKED FROM VEHICLES ONTO STREETS MUST BE REMOVED IMMEDIATELY.

CONSTRUCTION STANDARDS CITY OF WHITEFISH	VEHICLE TRACKING PAD	SD-66

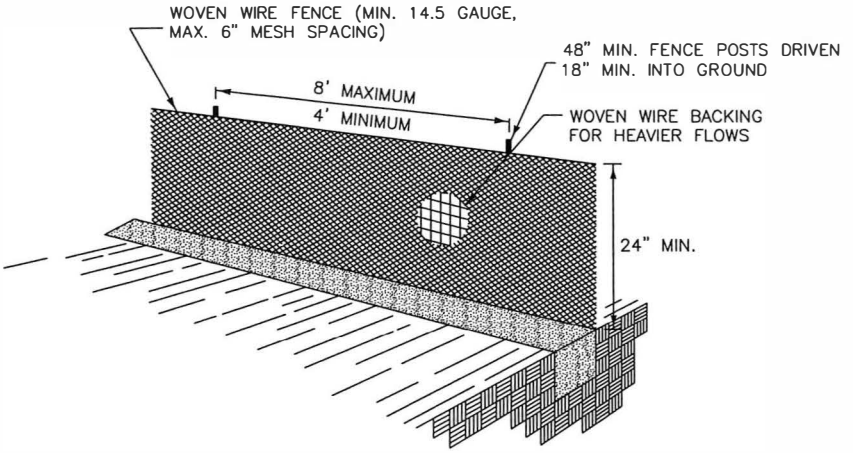

SILT FENCE - PLAN VIEW

SCALE: NONE

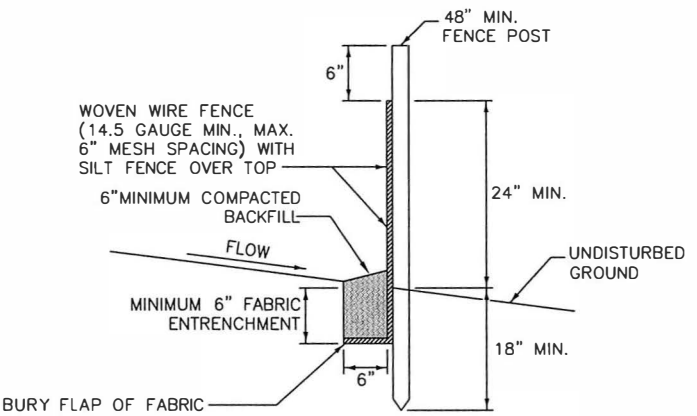

SILT FENCE - CROSS SECTION

SCALE: NONE

NOTES:

1. SILT FENCE SHALL BE INSTALLED BEFORE ANY EARTH REMOVAL OR EXCAVATION TAKES PLACE.
2. SET POSTS MAXIMUM 8 FEET ON CENTER AND EXCAVATE 6"X6" TRENCH UPSLOPE ALONG THE LINE OF POSTS.
3. ATTACH FILTER FABRIC TO POSTS AND EXTEND IT INTO TRENCH.
4. BACKFILL AND COMPACT EXCAVATED SOIL.